Filters MS-LF/LFM/LFX, MS series

Filters MS-LF/LFM/LFX, MS series

Product range overview – MS series service units

Type		Size	Pneumatic connection in housing	Connecting plate	Pressure regulation range [bar]						Grade of filtration [µm]			
					0.05 … 0.7	0.05 … 2.5	0.1 … 4	0.3 … 7	0.1 … 12	0.5 … 16	0.01	1	5	40
Code				AG…	D2	D4	D5	D6	D7	D8	A	B	C	E
Service units														
MSB-FRC	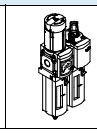	4	G⅛, G¼	G⅛, G¼, G⅜	–	–	–	■	■	–	–	–	■	■
		6	G¼, G⅜, G½	G¼, G⅜, G½, G¾	–	–	–	■	■	–	–	–	■	■
		9	–											
		12	–											
Service unit combinations (further variants can be ordered using the configurator ➔ Internet: msb4, msb6 or msb9)														
MSB	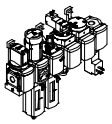	4	G¼	G⅛, G¼, G⅜	–	–	–	■	■	–	–	–	■	■
		6	G½	G¼, G⅜, G½, G¾	–	–	–	■	■	–	–	–	■	■
		9	–											
		12	–											
Individual devices														
Filter regulators **MS-LFR**	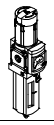	4	G⅛, G¼	G⅛, G¼, G⅜	–	–	■	■	■	–	–	–	■	■
		6	G¼, G⅜, G½	G¼, G⅜, G½, G¾	–	–	■	■	■	■	–	–	■	■
		9	G¾, G1	G½, G¾, G1, G1¼, G1½	–	–	■	■	■	■	–	–	■	■
		12	–	G1, G1¼, G1½, G2	–	–	–	■	■	■	–	–	■	■
Filters **MS-LF**	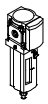	4	G⅛, G¼	G⅛, G¼, G⅜	–	–	–	–	–	–	–	–	■	■
		6	G¼, G⅜, G½	G¼, G⅜, G½, G¾	–	–	–	–	–	–	–	–	■	■
		9	G¾, G1	G½, G¾, G1, G1¼, G1½	–	–	–	–	–	–	–	–	■	■
		12	–	G1, G1¼, G1½, G2	–	–	–	–	–	–	–	–	■	■
Fine and micro filters **MS-LFM**	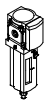	4	G⅛, G¼	G⅛, G¼, G⅜	–	–	–	–	–	–	■	■	–	–
		6	G¼, G⅜, G½	G¼, G⅜, G½, G¾	–	–	–	–	–	–	■	■	–	–
		9	G¾, G1	G½, G¾, G1, G1¼, G1½	–	–	–	–	–	–	■	■	–	–
		12	–	G1, G1¼, G1½, G2	–	–	–	–	–	–	■	■	–	–
Activated carbon filters **MS-LFX**	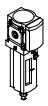	4	G⅛, G¼	G⅛, G¼, G⅜	–	–	–	–	–	–	–	–	–	–
		6	G¼, G⅜, G½	G¼, G⅜, G½, G¾	–	–	–	–	–	–	–	–	–	–
		9	G¾, G1	G½, G¾, G1, G1¼, G1½	–	–	–	–	–	–	–	–	–	–
		12	–	G1, G1¼, G1½, G2	–	–	–	–	–	–	–	–	–	–
Water separators **MS-LWS**	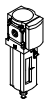	4	–											
		6	G¼, G⅜, G½	G¼, G⅜, G½, G¾	–	–	–	–	–	–	–	–	–	–
		9	G¾, G1	G½, G¾, G1, G1¼, G1½	–	–	–	–	–	–	–	–	–	–
		12	–	G1, G1¼, G1½, G2	–	–	–	–	–	–	–	–	–	–

Filters MS-LF/LFM/LFX, MS series

Product range overview – MS series service units

Type	Size	Bowl guard		Condensate drains				Pressure indicator					Security		Options		➔ Page/ Internet
		Plastic bowl with plastic bowl guard	Metal bowl	Manual rotary	Semi-automatic	Fully automatic	External, fully automatic, electrical	Cover plate (without pressure gauge)	Integrated MS pressure gauge	Adapter plate for EN pressure gauge G1/8	Adapter plate for EN pressure gauge G1/4	Pressure sensor	Rotary knob with detent, lockable via accessories	Rotary knob with integrated lock	Silencer	Flow direction from right to left	
Code		R	U	M	H	V	E...	VS	AG	A8	A4	AD...	AS	E11	S	Z	
Service units																	
MSB-FRC	4	■	–	■	–	■	–	–	■	–	–	–	■	–	–	■	msb4
	6	■	■	■	–	■	–	–	■	–	–	–	■	–	–	■	msb6
	9	–															–
	12	–															–
Service unit combinations																	
MSB	4	■	■	■	–	■	–	–	■	–	–	–	■	–	–	■	msb4
	6	■	■	■	–	■	–	–	■	–	–	–	■	–	–	■	msb6
	9	–															–
	12	–															–
Individual devices																	
Filter regulators **MS-LFR**	4	■	■	■	■	■	–	■	■	■	■	■	■	■	–	■	ms4-lfr
	6	■	■	■	■	■	■	■	■	–	■	■	■	■	–	■	ms6-lfr
	9	–	■	■	■	■	■	■	■	–	■	■	■	■	–	■	ms9-lfr
	12	–	■	■	–	■	■	■	■	–	■	–	■	■	–	■	ms12-lfr
Filters **MS-LF**	4	■	■	■	■	■	–	–	–	–	–	–	–	–	–	■	8, 10
	6	■	■	■	■	■	■	–	–	–	–	–	–	–	–	■	8, 10
	9	–	■	■	■	■	■	–	–	–	–	–	–	–	–	■	36
	12	–	■	■	–	■	■	–	–	–	–	–	–	–	–	■	65
Fine and micro filters **MS-LFM**	4	■	■	■	■	■	–	–	–	–	–	–	–	–	–	■	8, 18
	6	■	■	■	■	■	■	–	–	–	–	–	–	–	–	■	8, 18
	9	–	■	■	■	■	■	–	–	–	–	–	–	–	–	■	44
	12	–	■	■	–	■	■	–	–	–	–	–	–	–	–	■	72
Activated carbon filters **MS-LFX**	4	■	■	–	–	–	–	–	–	–	–	–	–	–	–	■	8, 30
	6	■	■	–	–	–	–	–	–	–	–	–	–	–	–	■	8, 30
	9	–	■	–	–	–	–	–	–	–	–	–	–	–	–	■	58
	12	–	■	–	–	–	–	–	–	–	–	–	–	–	–	■	81
Water separators **MS-LWS**	4	–															–
	6	–	■	–	–	■	■	–	–	–	–	–	–	–	–	■	ms6-lws
	9	–	■	–	–	■	■	–	–	–	–	–	–	–	–	■	ms9-lws
	12	–	■	–	–	■	■	–	–	–	–	–	–	–	–	■	ms12-lws

Filters MS-LF/LFM/LFX, MS series

Product range overview – MS series service units

Type		Size	Pneumatic connection in housing	Connecting plate	Pressure regulation range [bar]						Supply voltage			
					0.05 … 0.7	0.05 … 2.5	0.1 … 4	0.3 … 7	0.1 … 12	0.5 … 16	24 V DC, connection pattern to EN 175301	24 V DC, connection M12 to IEC 61076-2-101	110 V AC, connection pattern to EN 175301	230 V AC, connection pattern to EN 175301
Code				AG…	D2	D4	D5	D6	D7	D8	V24	V24P	V110	V230
Individual devices														
Pressure regulators **MS-LR**		4	G⅛, G¼	G⅛, G¼, G⅜	–	–	■	■	■	–	–	–	–	–
		6	G¼, G⅜, G½	G¼, G⅜, G½, G¾	–	–	■	■	■	■	–	–	–	–
		9	G¾, G1	G½, G¾, G1, G1¼, G1½	–	–	■	■	■	■	–	–	–	–
		12	–	G1, G1¼, G1½, G2	–	–	–	■	■	■	–	–	–	–
Pressure regulators **MS-LRB**		4	G¼	G⅛, G¼, G⅜	–	–	■	■	■	–	–	–	–	–
		6	G½	G¼, G⅜, G½, G¾	–	–	■	■	■	■	–	–	–	–
		9	–											
		12	–											
Precision pressure regulators **MS-LRP**		4	–											
		6	G¼, G⅜, G½	G¼, G⅜, G½, G¾	■	■	■	–	■	–	–	–	–	–
		9	–											
		12	–											
Precision pressure regulators **MS-LRPB**		4	–											
		6	G½	G¼, G⅜, G½, G¾	■	■	■	–	■	–	–	–	–	–
		9	–											
		12	–											
Electrical pressure regulators **MS-LRE**	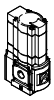	4	–											
		6	G¼, G⅜, G½	G¼, G⅜, G½, G¾	–	–	■	■	■	■	–	–	–	–
		9	–											
		12	–											
Lubricators **MS-LOE**	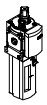	4	G⅛, G¼	G⅛, G¼, G⅜	–	–	–	–	–	–	–	–	–	–
		6	G¼, G⅜, G½	G¼, G⅜, G½, G¾	–	–	–	–	–	–	–	–	–	–
		9	G¾, G1	G½, G¾, G1, G1¼, G1½	–	–	–	–	–	–	–	–	–	–
		12	–	G1, G1¼, G1½, G2	–	–	–	–	–	–	–	–	–	–
On-off valves, manually actuated **MS-EM(1)**		4	G⅛, G¼	G⅛, G¼, G⅜	–	–	–	–	–	–	–	–	–	–
		6	G¼, G⅜, G½	G¼, G⅜, G½, G¾	–	–	–	–	–	–	–	–	–	–
		9	G¾, G1	G½, G¾, G1, G1¼, G1½	–	–	–	–	–	–	–	–	–	–
		12	–	G1, G1¼, G1½, G2	–	–	–	–	–	–	–	–	–	–
On-off valves, electrically actuated **MS-EE**		4	G⅛, G¼	G⅛, G¼, G⅜	–	–	–	–	–	–	■	–	■	■
		6	G¼, G⅜, G½	G¼, G⅜, G½, G¾	–	–	–	–	–	–	■	–	■	■
		9	G¾, G1	G½, G¾, G1, G1¼, G1½	–	–	–	–	–	–	■	■	■	■
		12	–	G1, G1¼, G1½, G2	–	–	–	–	–	–	■	■	■	■
Soft-start valves, pneumatically actuated **MS-DL**		4	G⅛, G¼	G⅛, G¼, G⅜	–	–	–	–	–	–	–	–	–	–
		6	G¼, G⅜, G½	G¼, G⅜, G½, G¾	–	–	–	–	–	–	–	–	–	–
		9	–											
		12	–	G1, G1¼, G1½, G2	–	–	–	–	–	–	–	–	–	–
Soft-start valves, electrically actuated **MS-DE**		4	G⅛, G¼	G⅛, G¼, G⅜	–	–	–	–	–	–	■	–	■	■
		6	G¼, G⅜, G½	G¼, G⅜, G½, G¾	–	–	–	–	–	–	■	–	■	■
		9	–											
		12	–	G1, G1¼, G1½, G2	–	–	–	–	–	–	■	■	■	■

Filters MS-LF/LFM/LFX, MS series

Product range overview – MS series service units

Type	Size	Bowl guard		Pressure indicator					Security		Options		➔ Page/ Internet
		Plastic bowl with plastic bowl guard	Metal bowl	Cover plate (without pressure gauge)	Integrated MS pressure gauge	Adapter plate for EN pressure gauge G1/8	Adapter plate for EN pressure gauge G1/4	Pressure sensor	Rotary knob with detent, lockable via accessories	Rotary knob with integrated lock	Silencer	Flow direction from right to left	
Code		R	U	VS	AG	A8	A4	AD...	AS	E11	S	Z	
Individual devices													
Pressure regulators **MS-LR**	4	–	–	■	■	■	■	■	■	■	–	■	ms4-lr
	6	–	–	■	■	–	■	■	■	■	–	■	ms6-lr
	9	–	–	■	■	–	■	■	■	■	–	■	ms9-lr
	12	–	–	■	■	–	■	–	■	■	–	■	ms12-lr
Pressure regulators **MS-LRB**	4	–	–	■	■	■	■	■	■	■	–	■	ms4-lrb
	6	–	–	■	■	–	■	■	■	■	–	■	ms6-lrb
	9	–											–
	12	–											–
Precision pressure regulators **MS-LRP**	4	–											–
	6	–	–	■	–	■	■	■	■	■	–	■	ms6-lrp
	9	–											–
	12	–											–
Precision pressure regulators **MS-LRPB**	4	–											–
	6	–	–	■	–	■	■	■	■	■	–	■	ms6-lrpb
	9	–											–
	12	–											–
Electrical pressure regulators **MS-LRE**	4	–											–
	6	–	–	■	■	–	■	–	–	–	–	■	ms6-lre
	9	–											–
	12	–											–
Lubricators **MS-LOE**	4	■	■	–	–	–	–	–	–	–	–	■	ms4-loe
	6	■	■	–	–	–	–	–	–	–	–	■	ms6-loe
	9	–	■	–	–	–	–	–	–	–	–	■	ms9-loe
	12	–	■	–	–	–	–	–	–	–	–	■	ms12-loe
On-off valves, manually actuated **MS-EM(1)**	4	–	–	■	■	■	■	■	–	–	■	■	ms4-em1
	6	–	–	■	■	–	■	■	–	–	■	■	ms6-em1
	9	–	–	■	■	–	■	–	–	–	■	■	ms9-em
	12	–	–	■	■	–	■	–	–	–	■	■	ms12-em
On-off valves, electrically actuated **MS-EE**	4	–	–	■	■	■	■	■	–	–	■	■	ms4-ee
	6	–	–	■	■	–	■	■	–	–	■	■	ms6-ee
	9	–	–	■	■	–	■	–	–	–	■	■	ms9-ee
	12	–	–	■	■	–	■	–	–	–	■	■	ms12-ee
Soft-start valves, pneumatically actuated **MS-DL**	4	–	–	■	■	■	■	■	–	–	–	■	ms4-dl
	6	–	–	■	■	–	■	■	–	–	–	■	ms6-dl
	9	–											–
	12	–	–	■	■	–	■	–	–	–	–	■	ms12-dl
Soft-start valves, electrically actuated **MS-DE**	4	–	–	■	■	■	■	■	–	–	–	■	ms4-de
	6	–	–	■	■	–	■	■	–	–	–	■	ms6-de
	9	–											–
	12	–	–	■	■	–	■	–	–	–	–	■	ms12-de

Filters MS-LF/LFM/LFX, MS series

Product range overview – MS series service units

Type		Size	Pneumatic connection in housing	Connecting plate	Performance Level		Supply voltage			
					Category 1, 1-channel	Category 4, 2-channel with self-monitoring	24 V DC, connection pattern to EN 175301	24 V DC, connection M12 to IEC 61076-2-101/ to EN 60947-5-2	110 V AC, connection pattern to EN 175301	230 V AC, connection pattern to EN 175301
Code				AG...	C	E	V24	V24P	V110	V230
Individual devices										
Soft start and exhaust valves **MS-SV-C**		4	–							
		6	G1/2	G1/4, G3/8, G1/2, G3/4	■	–	■	■	■	■
		9	G3/4, G1	G1/2, G3/4, G1, G1 1/4, G1 1/2	■	–	■	■	■	■
		12	–							
Soft start and exhaust valves **MS-SV-E**	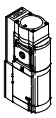	4	–							
		6	G1/2	G1/4, G3/8, G1/2, G3/4	–	■	■	–	–	–
		9	–							
		12	–							
Membrane air dryers **MS-LDM1**	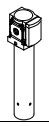	4	G1/8, G1/4	G1/8, G1/4, G3/8	–	–	–	–	–	–
		6	G1/4, G3/8, G1/2	G1/4, G3/8, G1/2, G3/4	–	–	–	–	–	–
		9	–							
		12	–							
Branching modules **MS-FRM**		4	G1/8, G1/4	G1/8, G1/4, G3/8	–	–	–	–	–	–
		6	G1/4, G3/8, G1/2	G1/4, G3/8, G1/2, G3/4	–	–	–	–	–	–
		9	G3/4, G1	G1/2, G3/4, G1, G1 1/4, G1 1/2	–	–	–	–	–	–
		12	–	G1, G1 1/4, G1 1/2, G2	–	–	–	–	–	–
Distributor blocks **MS-FRM-FRZ**		4	G1/4	–	–	–	–	–	–	–
		6	G1/2	–	–	–	–	–	–	–
		9	–							
		12	–							
Flow sensors **SFAM**		4	–							
		6	G1/2	G1/2	–	–	–	–	–	–
		9	–	G1, G1 1/2	–	–	–	–	–	–
		12	–							

Filters MS-LF/LFM/LFX, MS series

Product range overview – MS series service units

Type	Size	Bowl guard		Pressure indicator					Switch output		Options		➔ Page/ Internet
		Plastic bowl with plastic bowl guard	Metal bowl	Cover plate (without pressure gauge)	Integrated MS pressure gauge	Adapter plate for EN pressure gauge G1/8	Adapter plate for EN pressure gauge G1/4	Pressure sensor	2x PNP or NPN, 1 analogue output 4 ... 20 mA	2x PNP or NPN, 1 analogue output 0 ... 10 V	Silencer	Flow direction from right to left	
Code		R	U	VS	AG	A8	A4	AD...	2SA	2SV	S	Z/R	
Individual devices													
Soft start and exhaust valves **MS-SV-C**	4	–											–
	6	–	–	■	■	–	■	■	–	–	■	■	ms6-sv
	9	–	–	■	■	–	■	■	–	–	■	■	ms9-sv
	12	–											–
Soft start and exhaust valves **MS-SV-E**	4	–											–
	6	–	–	■	■	–	■	■	–	–	■	■	ms6-sv
	9	–											–
	12	–											–
Membrane air dryers **MS-LDM1**	4	–	■	–	–	–	–	–	–	–	–	■	ms4-ldm1
	6	–	■	–	–	–	–	–	–	–	–	■	ms6-ldm1
	9	–											–
	12	–											–
Branching modules **MS-FRM**	4	–	–	■	■	■	■	■	–	–	–	■	ms4-frm
	6	–	–	■	■	–	■	■	–	–	–	■	ms6-frm
	9	–	–	■	■	–	■	■	–	–	–	■	ms9-frm
	12	–	–	■	–	–	–	–	–	–	–	–	ms12-frm
Distributor blocks **MS-FRM-FRZ**	4	–	–	–	–	–	–	–	–	–	–	■	ms4-frm
	6	–	–	–	–	–	–	–	–	–	–	■	ms6-frm
	9	–											–
	12	–											–
Flow sensors **SFAM**	4	–											–
	6	–	–	–	–	–	–	–	■	■	–	■	sfam-62
	9	–	–	–	–	–	–	–	■	■	–	■	sfam-90
	12	–											–

New
Variant EX4, UL1

Filters MS4/MS6-LF/LFM/LFX, MS series

Peripherals overview

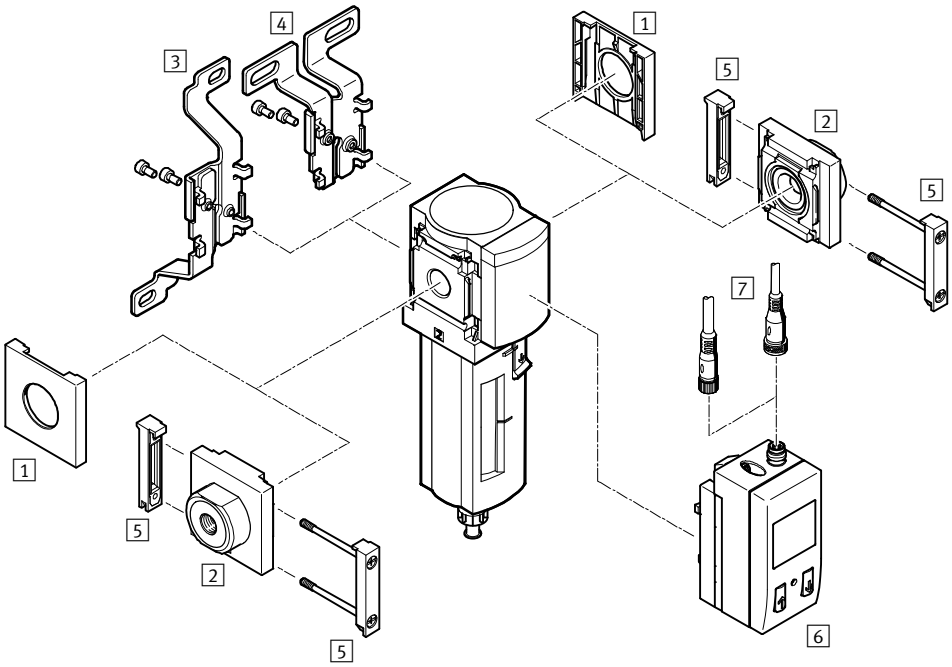

Note

Other accessories:
- Module connector for combination with sizes MS4/MS6 or size MS9 ➔ Internet: amv, rmv, armv
- Adapter plate for mounting on profiles ➔ Internet: ipm-80, ipm-40-80, ipm-80-80

Mounting attachments and accessories

		Individual device		Combination		➔ Page/Internet
		without connecting plate	with connecting plate	without connecting plate	with connecting plate	
1	Cover plate MS4/6-END	■	–	■	–	ms4-end, ms6-end
2	Connecting plate-SET MS4/6-AG...	–	■	–	■	ms4-ag, ms6-ag
3	Mounting bracket MS4/6-WB	■	■	–	–	ms4-wb, ms6-wb
4	Mounting bracket MS4-WBM	■	■	–	–	ms4-wbm
5	Module connector MS4/6-MV	–	■	■	■	ms4-mv, ms6-mv
6	Filter pollution indicator DP/DN/DPI/DNI	■ for LFM	■ for LFM	■ for LFM	■ for LFM	28
7	Connecting cable NEBU-M8...-LE3/NEBU-M12...-LE4	■ for LFM	■ for LFM	■ for LFM	■ for LFM	nebu
–	Mounting bracket MS4/6-WP/WPB/WPE/WPM	–	■	■	■	ms4-wp, ms6-wp

Filters MS4/MS6-LF/LFM/LFX, MS series

Type codes

MS	6	–	LFM	–	¼	–	A	R	M	–		–	DA

Series	
MS	Standard service unit

Size	
4	Grid dimension 40 mm
6	Grid dimension 62 mm

Service function	
LF	Filter
LFM	Fine and micro filter
LFX	Activated carbon filter

Pneumatic connection	
MS4	
⅛	G⅛ thread
¼	G¼ thread
MS6	
¼	G¼ thread
⅜	G⅜ thread
½	G½ thread

Grade of filtration (for LF and LFM only)	
A	0.01 µm
B	1 µm
C	5 µm
E	40 µm

Bowl guard	
R	Plastic bowl guard
U	Integrated as metal bowl

Condensate drain (for LF and LFM only)	
M	Manual rotary
V	Fully automatic

Flow rate (for LFM and LFX only)	
	Standard
HF	High flow rate

Filter change sensor (for LFM only)	
	Without differential pressure indicator
DA	Differential pressure indicator

Further variants can be ordered using the modular system	
Filters LF	➔ 16
Fine and micro filters LFM	➔ 28
Activated carbon filters LFX	➔ 34

- Connecting plates
- Condensate drain
- Range of application (only for LFM and LFX)
- Filter pollution indicator (for LFM only)
- Type of mounting
- EU certification
- UL certification
- Alternative flow direction

New
Variant EX4, UL1

Filters MS4/MS6-LF, MS series

Technical data

FESTO

Function
Condensate drain
manual rotary

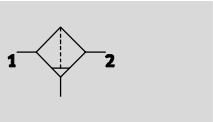

semi or fully automatic

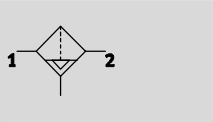

Flow rate
1,000 … 4,100 l/min

Temperature range
–10 … +60 °C

Operating pressure
0 … 20 bar

www.festo.com

The sintered filter with centrifugal separation removes contamination, rust and condensate from the compressed air. The filter cartridges are replaceable.

- Good particle and condensate separation
- High flow rate with minimal pressure drop
- Available with manual, semi-automatic, fully automatic or fully automatic, electrically actuated condensate drain
- Optional device variant EX4 for use in potentially explosive areas in zones 1, 2, 21 and 22
- Choice of filter cartridges: 5 µm or 40 µm
- New filter cartridges ➔ 87

General technical data						
Size		MS4		MS6		
Pneumatic connection 1, 2		G⅛	G¼	G¼	G⅜	G½
Design		Sintered filter with centrifugal separation				
Type of mounting		Via accessories				
		In-line installation				
Assembly position		Vertical ±5°				
Grade of filtration	[µm]	5				
		40				
Air purity class at the output		Compressed air in accordance with ISO 8573-1:2010 [6:8:4] (Grade of filtration 5 µm)				
		Compressed air in accordance with ISO 8573-1:2010 [7:8:4] (Grade of filtration 40 µm)				
Bowl guard		Plastic bowl guard				
		Integrated as metal bowl				
Condensate drain		Manual rotary				
		Semi-automatic				
		Fully automatic				
		–		Fully automatic, electrical		
Max. condensate volume	[cm³]	19 (with plastic bowl guard) 25 (with metal bowl)		38		

Note: This product conforms to ISO 1179-1 and to ISO 228-1

Standard nominal flow rate qnN[1] [l/min]						
Size		MS4		MS6		
Pneumatic connection		G⅛	G¼	G¼	G⅜	G½
Grade of filtration	5 µm	1,000	1,300	2,000	3,000	3,200
	40 µm	1,100	1,700	2,500	3,800	4,100

1) Measured at p1 = 6 bar and Δp = 1 bar

Filters MS4/MS6-LF, MS series

Technical data

Operating and environmental conditions							
Condensate drain	Manual rotary M		Semi-automatic H		Fully automatic V		Fully automatic, electrical E2/E3/E4
Size	MS4	MS6	MS4	MS6	MS4	MS6	MS6
Operating pressure [bar]	0 … 14 (0 … 10)[1]	0 … 20 (0 … 10)[1]	1.5 … 12 (1.5 … 10)[1]	1.5 … 12 (1.5 … 10)[1]	2 … 12 (2 … 10)[1]	2 … 12 (2 … 10)[1]	0.8 … 16 (0.8 … 10)[1]
Operating medium	Compressed air in accordance with ISO 8573-1:2010 [–:9:–]		Compressed air in accordance with ISO 8573-1:2010 [–:9:–]		Compressed air in accordance with ISO 8573-1:2010 [7:9:–]		Compressed air in accordance with ISO 8573-1:2010 [–:9:–]
	Inert gases						
Ambient temperature [°C]	–10 … +60		+5 … +60		+5 … +60		+1 … +60
Temperature of medium [°C]	–10 … +60		+5 … +60		+5 … +60		+1 … +60
Storage temperature [°C]	–10 … +60		–10 … +60		–10 … +60		+1 … +60
Corrosion resistance class CRC[2]	2						
UL certification	cULus recognized (OL)						

1) Value in brackets applies to MS4/MS6-LF with UL certification.
2) Corrosion resistance class CRC 2 to Festo standard FN 940070
Moderate corrosion stress. Indoor applications in which condensation may occur. External visible parts with primarily decorative requirements for the surface and which are in direct contact with the ambient atmosphere typical for industrial applications.

ATEX	
EU certification	EX4
ATEX category gas	II 2G
Ex-ignition protection type gas	c T6 X
ATEX category dust	II 2D
EX-ignition protection type dust	c 60 °C X
ATEX ambient temperature	–10 °C ≤ Ta ≤ +60 °C (manual rotary condensate drain M)
	+5 °C ≤ Ta ≤ +60 °C (semi-automatic/fully automatic condensate drain H/V)
CE mark (see declaration of conformity)	To EU Explosion Protection Directive (ATEX)

Weights [g]		
Size	MS4	MS6
Filter with plastic bowl guard R	189	600
Filter with metal bowl U	349	820
Filter with metal bowl U and fully automatic, electrically actuated condensate drain E2/E3/E4	–	1,800

Materials

Sectional view

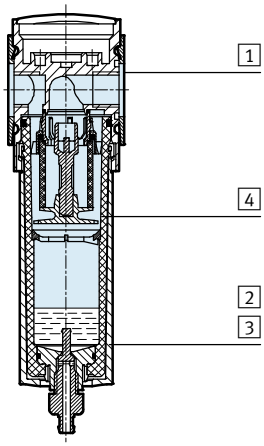

Filters		
1	Body	Die-cast aluminium
2	Plastic bowl guard	PC
3	Metal bowl	Wrought aluminium alloy, die-cast aluminium
	Viewing window	PA
4	Filter element	PE
–	Seals	NBR
Note on materials		RoHS-compliant (not with variant E2, E3 or E4)
		Free of copper and PTFE

Filters MS4/MS6-LF, MS series

Technical data

FESTO

Standard flow rate qn as a function of the differential pressure Δp1-2

Grade of filtration 5 µm | Grade of filtration 40 µm

MS4-LF-⅛

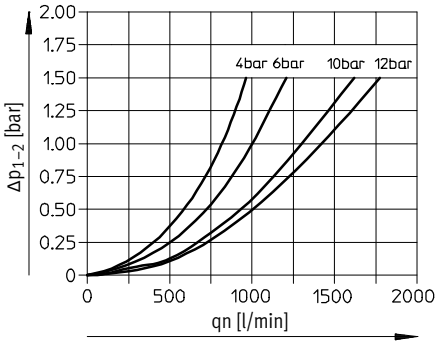

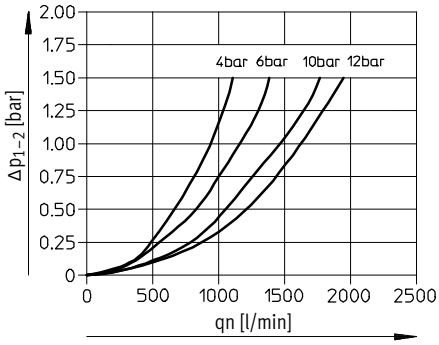

MS4-LF-¼

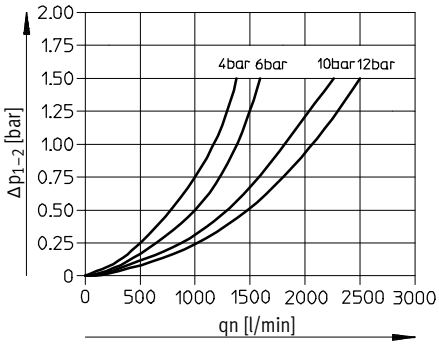

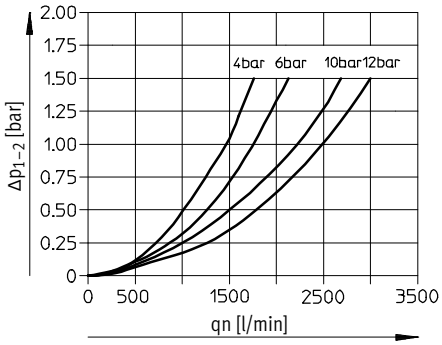

MS6-LF-¼

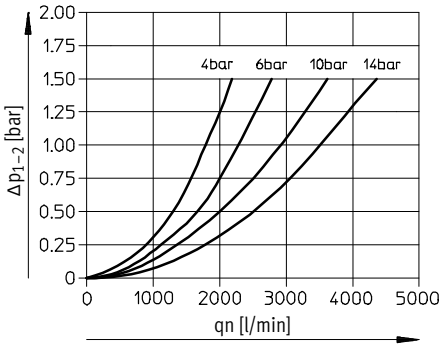

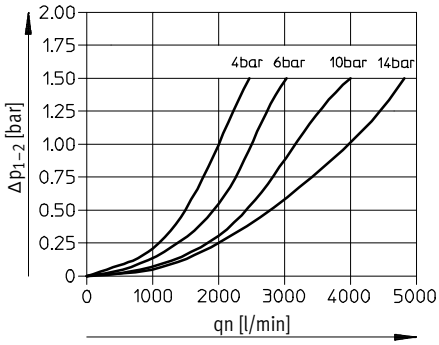

MS6-LF-⅜

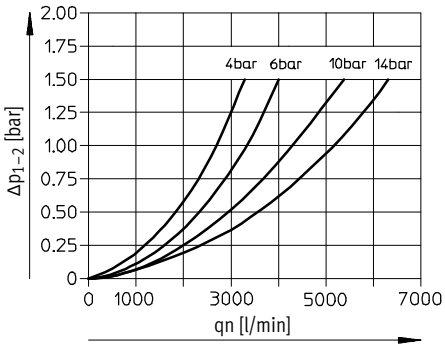

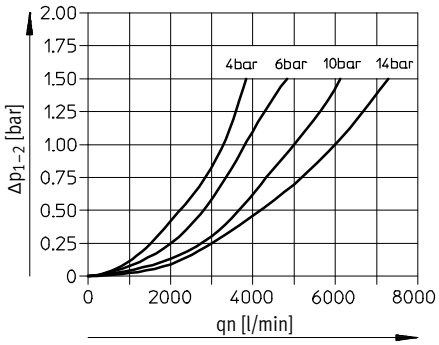

Filters MS4/MS6-LF, MS series

Technical data

FESTO

Standard flow rate qn as a function of the differential pressure Δp1-2

MS6-LF-½

Grade of filtration 5 µm

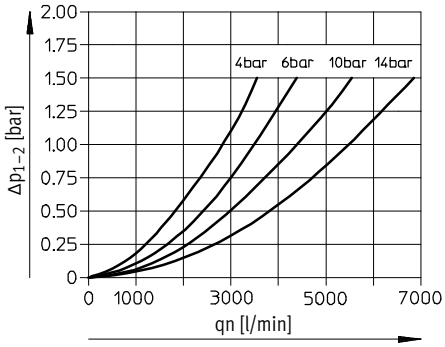

Grade of filtration 40 µm

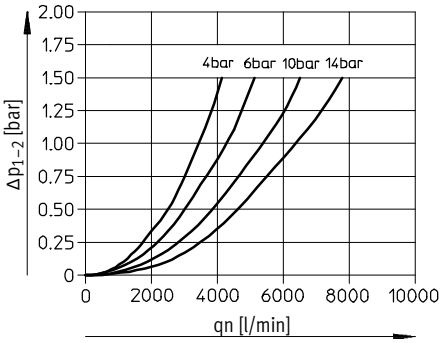

Dimensions – Basic version

Download CAD data ➔ **www.festo.com**

Manual rotary condensate drain

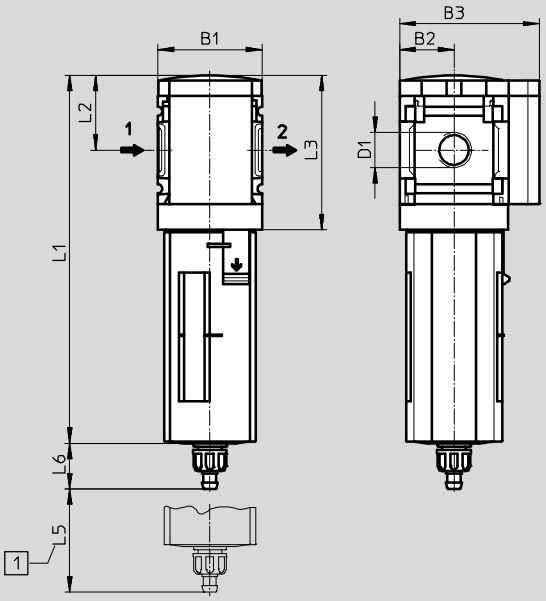

1 Installation dimensions

➔ Flow direction

Type	B1	B2	B3	D1	L1 Bowl guard Plastic	L1 Bowl guard Metal	L2	L3	L5	L6 Bowl guard Plastic	L6 Bowl guard Metal
MS4-LF-⅛	40	21	54	G⅛	142.8	159.4	29	60.5	25	17.7	17.7
MS4-LF-¼				G¼							
MS6-LF-¼	62	31	76	G¼	193	199	42	87.5	68	16	19
MS6-LF-⅜				G⅜							
MS6-LF-½				G½							

Note: This product conforms to ISO 1179-1 and to ISO 228-1

Filters MS4/MS6-LF, MS series

Technical data

FESTO

Dimensions – Condensate drain Download CAD data ➔ **www.festo.com**

Manual rotary M

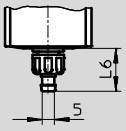

Barbed fitting for plastic tubing PCN-4

Type	L6
Plastic bowl guard	
MS4-LF-...-M	17.7
MS6-LF-...-M	16
Metal bowl	
MS4-LF-...-M	17.7
MS6-LF-...-M	19

Semi-automatic H

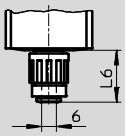

QS fitting for plastic tubing PUN-6/PAN-6

Type	L6
Plastic bowl guard	
MS4-LF-...-H	22.1
MS6-LF-...-H	20
Metal bowl	
MS4-LF-...-H	22.1
MS6-LF-...-H	23

Fully automatic V

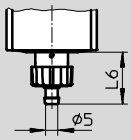

Barbed fitting for plastic tubing PCN-4

Type	L6
Plastic bowl guard	
MS4-LF-...-V	20.4
MS6-LF-...-V	19
Metal bowl	
MS4-LF-...-V	20.4
MS6-LF-...-V	22

Fully automatic, electrically actuated E2/E3/E4 Technical data ➔ Internet: pwea

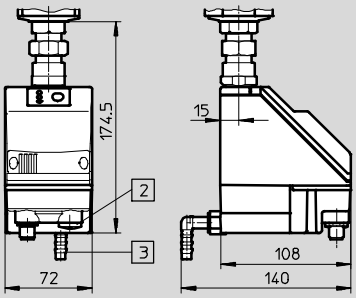

Condensate drain PWEA:

2 Electrical connection: Screw terminal PG9

3 Connection 360° rotatable for plastic tubing PUN-H-12x2

Filters MS4/MS6-LF, MS series

Technical data

Ordering data							
Size	Condensate drain	Connection	Grade of filtration 5 µm			Grade of filtration 40 µm	
			Part No.	Type		Part No.	Type
Plastic bowl guard							
MS4	manual rotary	G⅛	**529403**	**MS4-LF-⅛-CRM**		**529407**	**MS4-LF-⅛-ERM**
		G¼	**529395**	**MS4-LF-¼-CRM**		**529399**	**MS4-LF-¼-ERM**
	fully automatic	G⅛	**529405**	**MS4-LF-⅛-CRV**		**–**	**–**
		G¼	**529397**	**MS4-LF-¼-CRV**		**529401**	**MS4-LF-¼-ERV**
MS6	manual rotary	G¼	**529623**	**MS6-LF-¼-CRM**		**529631**	**MS6-LF-¼-ERM**
		G⅜	**529639**	**MS6-LF-⅜-CRM**		**529647**	**MS6-LF-⅜-ERM**
		G½	**529607**	**MS6-LF-½-CRM**		**529615**	**MS6-LF-½-ERM**
	fully automatic	G¼	**529625**	**MS6-LF-¼-CRV**		**–**	**–**
		G⅜	**529641**	**MS6-LF-⅜-CRV**		**529649**	**MS6-LF-⅜-ERV**
		G½	**529609**	**MS6-LF-½-CRV**		**529617**	**MS6-LF-½-ERV**
Integrated as metal bowl							
MS4	manual rotary	G¼	**535654**	**MS4-LF-¼-CUM**		**535660**	**MS4-LF-¼-EUM**
	fully automatic	G¼	**–**	**–**		**535658**	**MS4-LF-¼-EUV**
MS6	manual rotary	G½	**529611**	**MS6-LF-½-CUM**		**529619**	**MS6-LF-½-EUM**
	fully automatic	G½	**529613**	**MS6-LF-½-CUV**		**529621**	**MS6-LF-½-EUV**

New
Variant EX4, UL1

Filters MS4/MS6-LF, MS series

Ordering data – Modular products

FESTO

M Mandatory data ➔

Module No.	Series	Size		Function		Connection size		Grade of filtration		Bowl
527695 527668	MS	4, 6		LF		⅛, ¼, ⅜, ½, AGA, AGB, AGC, AGD, AGE		E, C		R, U
Order example										
527695	**MS**	**4**	–	**LF**	–	**AGB**	–	**E**	–	**R**

Ordering table

Grid dimension [mm]	40	62	Conditions	Code		Enter code
M Module No.	**527695**	**527668**				
Series	Standard			**MS**		MS
Size	4	6		**...**		
Function	Filters			**-LF**		-LF
Connection size	Thread G⅛	–	1	**-⅛**		
	Thread G¼	Thread G¼	1	**-¼**		
	–	Thread G⅜	1	**-⅜**		
	–	Thread G½	1	**-½**		
	Connecting plate G⅛	–		**-AGA**		
	Connecting plate G¼	Connecting plate G¼		**-AGB**		
	Connecting plate G⅜	Connecting plate G⅜		**-AGC**		
	–	Connecting plate G½		**-AGD**		
	–	Connecting plate G¾		**-AGE**		
Grade of filtration	40 µm			**-E**		
	5 µm			**-C**		
Bowl	Plastic bowl with plastic bowl guard			**-R**		
↓	Metal bowl			**-U**		

1 **⅛, ¼, ⅜, ½, E2, E3, E4, WPM**
Not with EU certification EX4

Transfer order code

	MS		–	**LF**	–		–		–	

Filters MS4/MS6-LF, MS series

Ordering data – Modular products

FESTO

➔ M Mandatory data	O Options			
Condensate drain	Type of mounting	EU certification	UL certification	Alternative flow direction
M, H, V, E2, E3, E4	WP, WPM, WB, WBM	EX4	UL1	Z
– M	–	–	–	–

Ordering table

Grid dimension [mm]		40	62	Condi-tions	Code		Enter code
↓ M	Condensate drain	Manual			-M		
		Semi-automatic (P1 max. 12 bar)			-H		
		Fully automatic (P1 max. 12 bar)			-V		
		–	External fully automatic condensate drain, electrical, 110 V AC, terminals	1 2	-E2		
		–	External fully automatic condensate drain, electrical, 230 V AC, terminals	1 2	-E3		
		–	External fully automatic condensate drain, electrical, 24 V DC, terminals	1 2	-E4		
O	Type of mounting	Mounting bracket		3	-WP		
		Mounting bracket		1 3	-WPM		
		Mounting bracket			-WB		
		Mounting bracket	–		-WBM		
	EU certification	II 2GD to EU Directive 94/9/EG			-EX4		
	UL certification	cULus, ordinary location for Canada and USA			-UL1		
	Alternative flow direction	Flow direction from right to left			-Z		

2 **E2, E3, E4** Only with metal bowl U.

3 **WP, WPM** Only with connecting plate AGA, AGB, AGC, AGD or AGE.

Transfer order code

– ____ – ____ – ____ – ____ – ____

New
Variant EX4, UL1

Fine and micro filters MS4/MS6-LFM, MS series

Technical data

FESTO

Function
Condensate drain
manual rotary
without differential pressure indicator

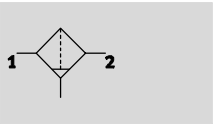

with differential pressure indicator or filter pollution indicator

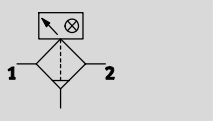

Condensate drain
semi or fully automatic
without differential pressure indicator

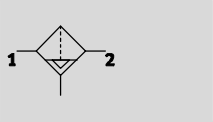

with differential pressure indicator or filter pollution indicator

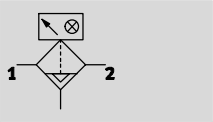

Flow rate
54 … 3,000 l/min

Temperature range
−10 … +60 °C

Operating pressure
0 … 20 bar

www.festo.com
Wearing parts kits
➔ 27

- High-performance filter for exceptionally clean compressed air
- Air quality to ISO 8573-1:2010
- Available with manual, semi-automatic, fully automatic or fully automatic, electrically actuated condensate drain
- Available with differential pressure indicator for display of filter pollution
- Available with electronic filter pollution indicator
- Optionally with filter cartridge for low flow rates, suitable for sealing air and cleaning air
- Optional device variant EX4 for use in potentially explosive areas in zones 1, 2, 21 and 22
- Choice of filter cartridges: 0.01 µm or 1 µm
- New filter cartridges ➔ 87

General technical data					
Size	MS4		MS6		
Pneumatic connection 1, 2	G⅛	G¼	G¼	G⅜	G½
Constructional design	Fibre filter				
Type of mounting	Via accessories				
	In-line installation				
Mounting position	Vertical ±5°				
Grade of filtration [µm]	0.01 (micro filter MS-LFM-A)				
	1 (fine filter MS-LFM-B)				
Air purity class at the output	Compressed air in accordance with ISO 8573-1:2010 [1:7:2] (Grade of filtration 0.01µm, micro filter MS-LFM-A)				
	Compressed air in accordance with ISO 8573-1:2010 [2:7:3] (Grade of filtration 1µm, fine filter MS-LFM-B)				
Filter efficiency [%]	99.9999 (Grade of filtration 0.01µm, micro filter MS-LFM-A)				
	99.99 (Grade of filtration 1µm, fine filter MS-LFM-B)				
Bowl guard	Plastic bowl guard				
	Integrated as metal bowl				
Condensate drain	Manual rotary				
	Semi-automatic				
	Fully automatic				
	–		Fully automatic, electrically actuated		
Differential pressure indication[1)]	Visual display				
	With filter pollution indicator based on differential pressure				
Residual oil content [mg/m³]	≤0.01 (micro filter MS-LFM-A) ≤0.5 (fine filter MS-LFM-B)				
Max. condensate volume [cm³]	19 (with plastic bowl guard) 25 (with metal shell)		38		

1) Recommended max. differential pressure for changing the filter cartridge is Δp_{1-2} = 0.35 bar; for the micro filter MS6-LFM-A with range of application HP Δp_{1-2} = 0.5 bar
Note: This product conforms to ISO 1179-1 and to ISO 228-1

Fine and micro filters MS4/MS6-LFM, MS series

Technical data

Standard flow rate q_n[1] [l/min]				
Size	MS4	MS6		
Variant	Standard	Standard	High flow rate HF	Range of application HP, suitable for sealing air and cleaning air
Micro filter MS-LFM-A				
Max. standard flow rate for air purity class $q_{n\ max}$	360	900	2,500	400
Min. standard flow rate for air purity class $q_{n\ min}$	54	135	150	60
Fine filter MS-LFM-B				
Max. standard flow rate for air purity class $q_{n\ max}$	360	950	3,000	500
Min. standard flow rate for air purity class $q_{n\ min}$	54	140	188	60

1) Measured at p1 = 6 bar.
125 l/min must be available for the fully automatic condensate drain to close correctly.

Technical data – Filter pollution indicator					
Filter pollution indicator		DP	DN	DPI	DNI
Pressure measuring range	[bar]	0 … +1			
Measured variable		Differential pressure; percentage value for filter pollution			
Switch output		PNP	NPN	PNP	NPN
Analogue output	[mA]	–		4 … 20	
Operating voltage range	[V DC]	15 … 30			
Max. output current	[mA]	150			
Protection class		IP65			
CE mark (see declaration of conformity)		In accordance with EU EMC directive			
		In accordance with EU Low Voltage Directive			

Operating and environmental conditions								
Condensate drain		Manual rotary M		Semi-automatic H		Fully automatic V		Fully automatic, electrical E2/E3/E4
Size		MS4	MS6	MS4	MS6	MS4	MS6	MS6
Operating pressure	[bar]	0 … 14 (0 … 10)[1]	0 … 20 (0 … 10)[1]	1.5 … 12 (1.5 … 10)[1]	1.5 … 12 (1.5 … 10)[1]	2 … 12 (2 … 10)[1]	2 … 12 (2 … 10)[1]	0.8 … 16 (0.8 … 10)[1]
Operating medium		Compressed air in accordance with ISO 8573-1:2010 [6:8:4][2]						
		Inert gases						
Ambient temperature	[°C]	−10 … +60 (0 … +50)[3]		+5 … +60 (+5 … +50)[3]		+5 … +60 (+5 … +50)[3]		+1 … +60 (+1 … +50)[3]
Temperature of medium	[°C]	−10 … +60 (0 … +50)[3]		+5 … +60 (+5 … +50)[3]		+5 … +60 (+5 … +50)[3]		+1 … +60 (+1 … +50)[3]
Storage temperature	[°C]	−10 … +60 (0 … +50)[3]		−10 … +60 (0 … +50)[3]		−10 … +60 (0 … +50)[3]		+1 … +60 (+1 … +50)[3]
Corrosion resistance class CRC[4]		2						
UL certification		cULus recognized (OL)						

1) Value in brackets applies to MS4/MS6-LFM with UL certification or with filter pollution indicator DP/DN/DPI/DPN.
2) It is recommended to prefilter the compressed air for the micro filter MS-LFM-A using a fine filter MS-LFM-B (grade of filtration 1 µm).
3) Value in brackets applies to MS4/MS6-LFM with filter pollution indicator DP/DN/DPI/DPN.
4) Corrosion resistance class CRC 2 to Festo standard FN 940070
Moderate corrosion stress. Indoor applications in which condensation may occur. External visible parts with primarily decorative requirements for the surface and which are in direct contact with the ambient atmosphere typical for industrial applications.

New
Variant EX4, UL1

Fine and micro filters MS4/MS6-LFM, MS series

Technical data

ATEX	
EU certification	EX4
ATEX category gas	II 2G
Ex-ignition protection type gas	c T6 X
ATEX category dust	II 2D
EX-ignition protection type dust	c 60 °C X
ATEX ambient temperature	−10 °C ≤ Ta ≤ +60 °C (manual rotary condensate drain M)
	+5 °C ≤ Ta ≤ +60 °C (semi-automatic/fully automatic condensate drain H/V)
CE mark (see declaration of conformity)	To EU Explosion Protection Directive (ATEX)

Weight [g]			
Size	MS4	MS6	
Variant	Standard	Standard/Range of application HP	High flow rate HF
Fine and micro filter with plastic bowl guard R	190	600	1,280
Fine and micro filter with metal bowl U	350	820	1,500
Fine and micro filter with metal bowl guard U and fully automatic, electrically actuated condensate drain E2/E3/E4	–	1,800	2,180
Filter pollution indicator	80	100	100

Materials

Sectional view

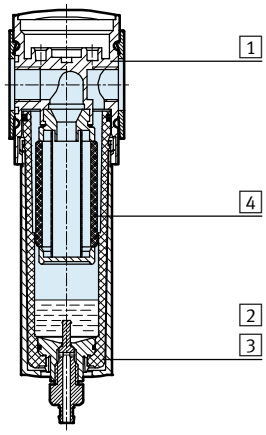

Fine and micro filters		
1	Housing	Die-cast aluminium
2	Plastic bowl guard	PC
3	Metal bowl	Wrought aluminium alloy, die-cast aluminium
	Viewing window	PA
4	Filter	Borosilicate fibre
–	Seals	NBR
Note on materials		RoHS-compliant (not with variant E2, E3 or E4)
		Free of copper and PTFE

Filter pollution indicator	
Housing	PA POM
Adapter	PA
Display	PC
Seals	NBR
Note on materials	Free of copper and PTFE

Fine and micro filters MS4/MS6-LFM, MS series

Technical data

FESTO

Standard flow rate qn as a function of the differential pressure Δp1-2

Grade of filtration 0.01 µm | Grade of filtration 1 µm

MS4-LFM-⅛ and MS4-LFM-¼

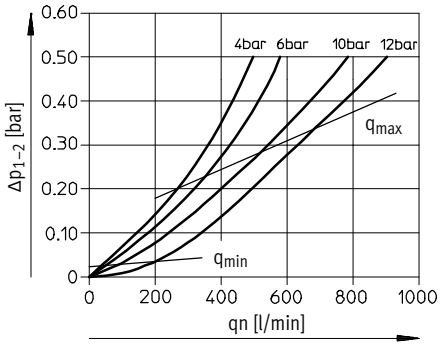

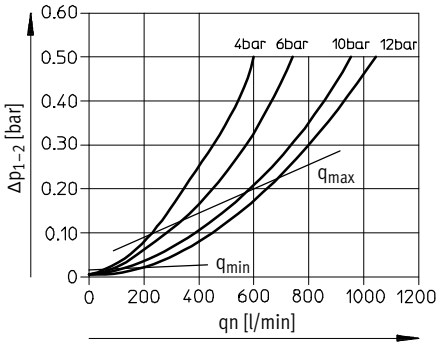

MS6-LFM-¼

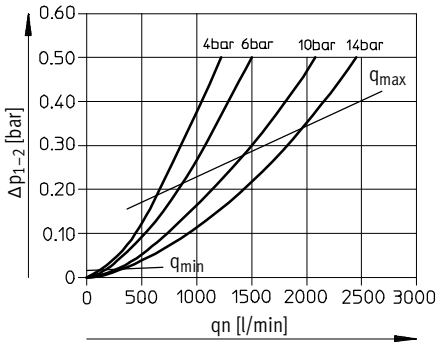

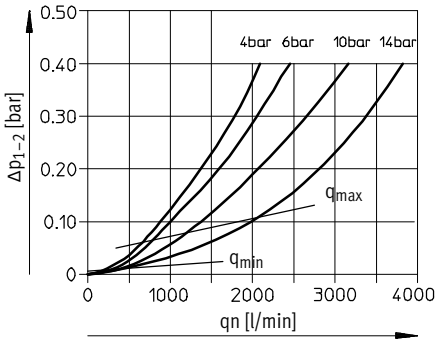

MS6-LFM-⅜

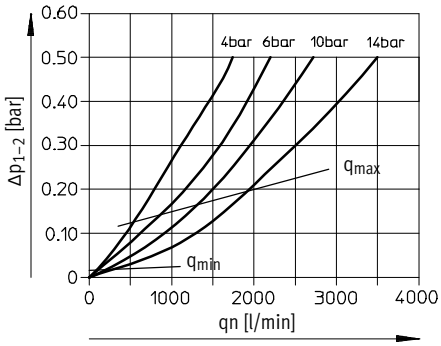

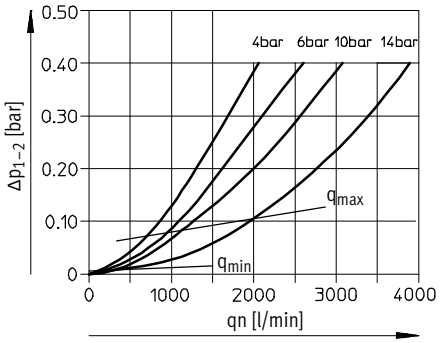

MS6-LFM-½

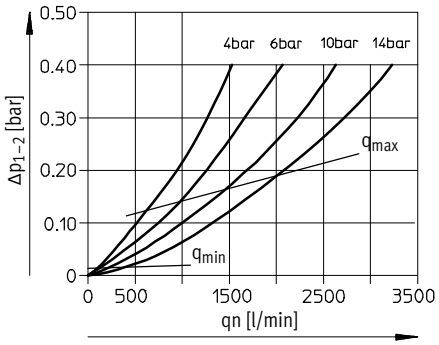

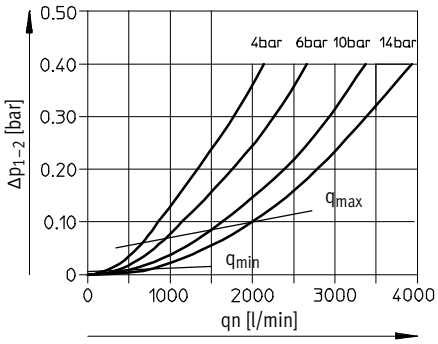

Fine and micro filters MS4/MS6-LFM, MS series

Technical data

FESTO

Standard flow rate qn as a function of the differential pressure p1-2

MS6-LFM-¼-...-HF, Grade of filtration 0.01 µm

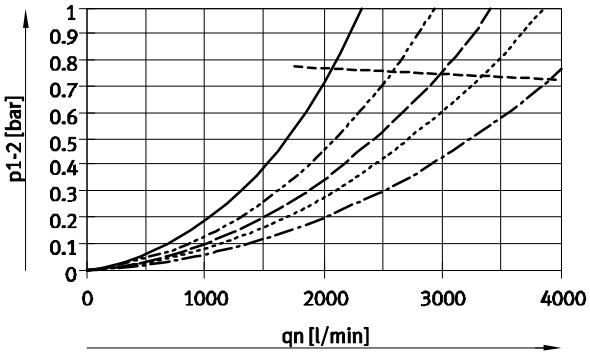

MS6-LFM-¼-...-HF, Grade of filtration 1 µm

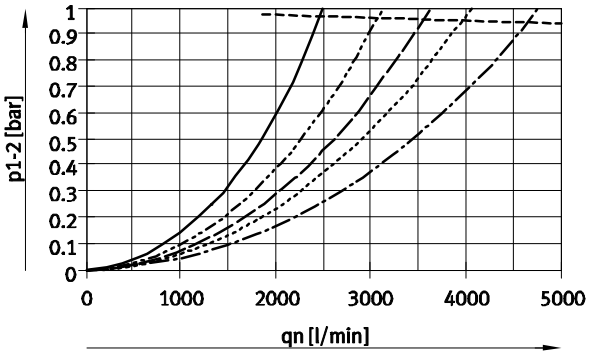

MS6-LFM-⅜-...-HF, Grade of filtration 0.01 µm

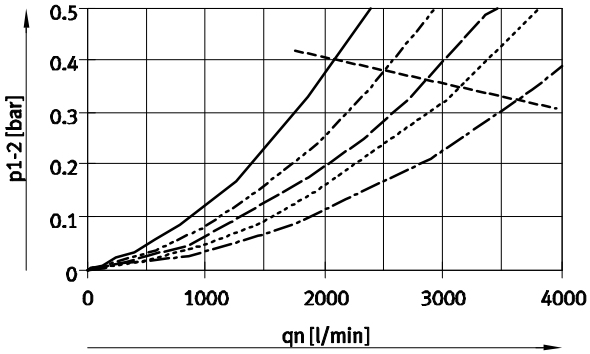

MS6-LFM-⅜-...-HF, Grade of filtration 1 µm

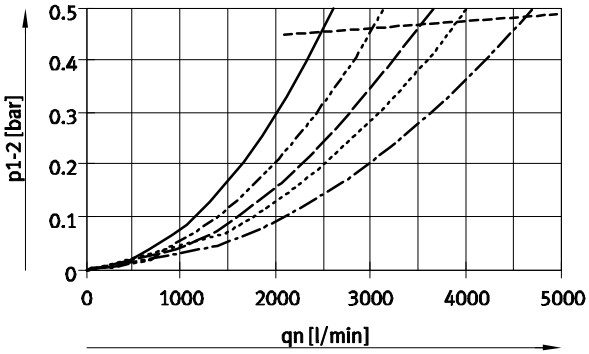

MS6-LFM-½-...-HF, Grade of filtration 0.01 µm

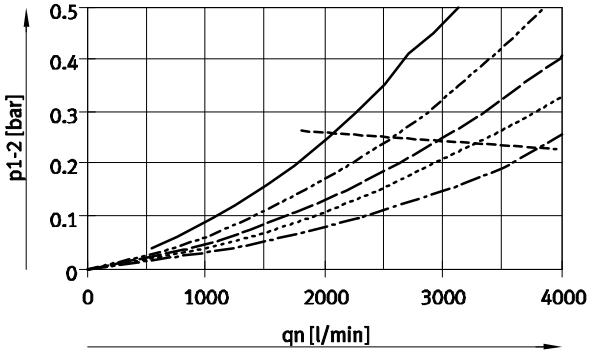

MS6-LFM-½-...-HF, Grade of filtration 1 µm

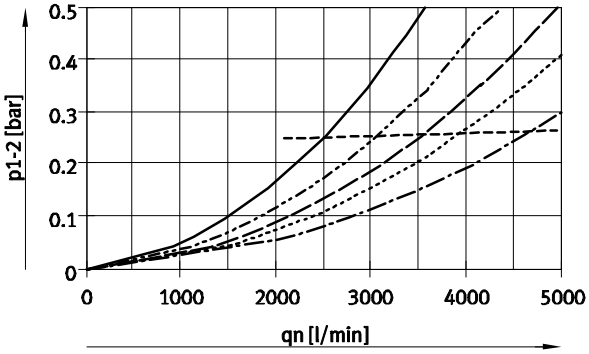

- p1: 4 bar (q_{min}: 103 l/min)
- p1: 6 bar (q_{min}: 125 l/min)
- p1: 8 bar
- p1: 10 bar (q_{min}: 162 l/min)
- p1: 14 bar (q_{min}: 192 l/min)
- q_{max}

- p1: 4 bar (q_{min}: 124 l/min)
- p1: 6 bar (q_{min}: 150 l/min)
- p1: 8 bar
- p1: 10 bar (q_{min}: 194 l/min)
- p1: 14 bar (q_{min}: 230 l/min)
- q_{max}

Fine and micro filters MS4/MS6-LFM, MS series

Technical data

Dimensions – Basic version

Download CAD data ➔ **www.festo.com**

Standard/Range of application HP,
manual rotary condensate drain

High flow rate HF,
manual rotary condensate drain

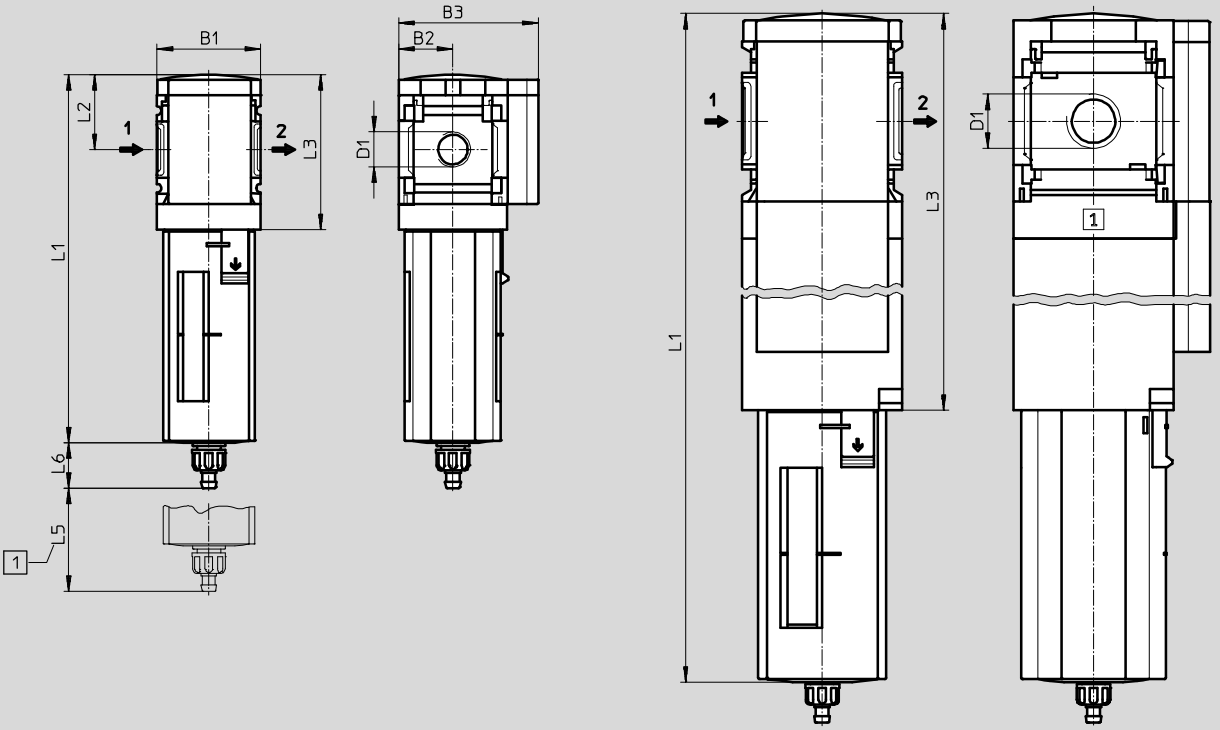

1 Installation dimensions

➔ Flow direction

Type	B1	B2	B3	D1	L1 Bowl guard		L2	L3	L5	L6 Bowl guard	
					Plastic	Metal				Plastic	Metal
MS4-LFM-⅛	40	21	54	G⅛	142	160	29	60	25	17.7	17.7
MS4-LFM-¼				G¼							
MS6-LFM-¼	62	31	76	G¼	193	199	42	87.5	75	16	19
MS6-LFM-⅜				G⅜							
MS6-LFM-½				G½							
MS6-LFM-¼-...-HF	62	31	76	G¼	313	319	42	207	75	16	19
MS6-LFM-⅜-...-HF				G⅜							
MS6-LFM-½-...-HF				G½							

Note: This product conforms to ISO 1179-1 and to ISO 228-1

Fine and micro filters MS4/MS6-LFM, MS series

Technical data

FESTO

Dimensions – Differential pressure indicator DA Download CAD data ➔ **www.festo.com**

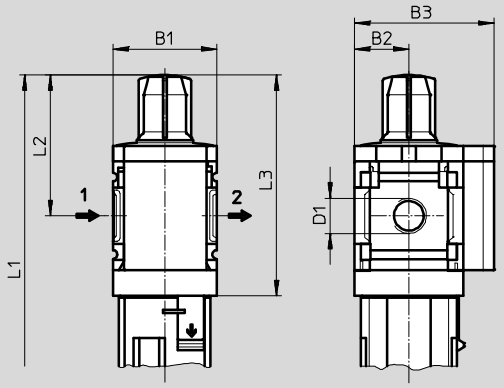

➔ Flow direction

Type	B1	B2	B3	D1	L1 Bowl guard		L2	L3
					Plastic	Metal		
MS4-LFM-⅛-...-DA	40	21	54	G⅛	168	186	55	86
MS4-LFM-¼-...-DA				G¼				
MS6-LFM-¼-...-DA	62	31	76	G¼	219	225	68	113
MS6-LFM-⅜-...-DA				G⅜				
MS6-LFM-½-...-DA				G½				
MS6-LFM-¼-...-HF-DA	62	31	76	G¼	339	345	68	113
MS6-LFM-⅜-...-HF-DA				G⅜				
MS6-LFM-½-...-HF-DA				G½				

Note: This product conforms to ISO 1179-1 and to ISO 228-1

Fine and micro filters MS4/MS6-LFM, MS series

Technical data

FESTO

Dimensions – Filter pollution indicator DP/DN/DPI/DNI

Download CAD data ➔ **www.festo.com**

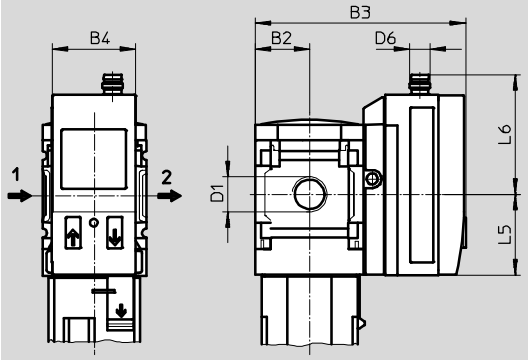

➔ Flow direction

Variant DP:
Filter pollution indicator with 3-pin M8x1 plug, 1 switch output PNP

Variant DN:
Filter pollution indicator with 3-pin M8x1 plug, 1 switch output NPN

Variant DPI:
Filter pollution indicator with 4-pin M12x1 plug, 1 switch output PNP and 4 ... 20 mA analogue

Variant DNI:
Filter pollution indicator with 4-pin M12x1 plug, 1 switch output NPN and 4 ... 20 mA analogue

Type	B2	B3	B4	D1	D6	L5	L6
MS4-LFM-⅛-...-DP/DN	21	81.8	32.3	G⅛	M8x1	32	47
MS4-LFM-¼-...-DP/DN				G¼			
MS4-LFM-⅛-...-DPI/DNI	21	81.8	32.3	G⅛	M12x1	32	56
MS4-LFM-¼-...-DPI/DNI				G¼			
MS6-LFM-¼-...-DP/DN	31	102	32.3	G¼	M8x1	32	47
MS6-LFM-⅜-...-DP/DN				G⅜			
MS6-LFM-½-...-DP/DN				G½			
MS6-LFM-¼-...-DPI/DNI	31	102	32.3	G¼	M12x1	32	56
MS6-LFM-⅜-...-DPI/DNI				G⅜			
MS6-LFM-½-...-DPI/DNI				G½			

Note: This product conforms to ISO 1179-1 and to ISO 228-1

Fine and micro filters MS4/MS6-LFM, MS series

Technical data

FESTO

Dimensions – Condensate drain Download CAD data ➔ **www.festo.com**

Manual rotary M

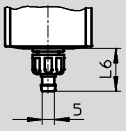

Barbed fitting for plastic tubing PCN-4

Type	L6
Plastic bowl guard	
MS4-LFM-...-M	17.7
MS6-LFM-...-M	16
Metal bowl	
MS4-LFM-...-M	17.7
MS6-LFM-...-M	19

Semi-automatic H

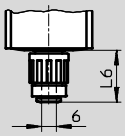

QS fitting for plastic tubing PUN-6/PAN-6

Type	L6
Plastic bowl guard	
MS4-LFM-...-H	22.1
MS6-LFM-...-H	20
Metal bowl	
MS4-LFM-...-H	22.1
MS6-LFM-...-H	23

Fully automatic V

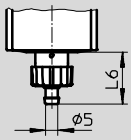

Barbed fitting for plastic tubing PCN-4

Type	L6
Plastic bowl guard	
MS4-LFM-...-V	20.4
MS6-LFM-...-V	19
Metal bowl	
MS4-LFM-...-V	20.4
MS6-LFM-...-V	22

Fully automatic, electrically actuated E2/E3/E4 Technical data ➔ Internet: pwea

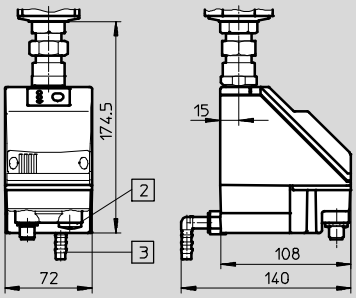

Condensate drain PWEA:

2 Electrical connection: Screw terminal PG9

3 Connection 360° rotatable for plastic tubing PUN-H-12x2

Fine and micro filters MS4/MS6-LFM, MS series

Technical data

FESTO

Ordering data						
Without differential pressure indicator						
Size	Condensate drain	Connection	Micro filter Grade of filtration 0.01 µm		Fine filter Grade of filtration 1 µm	
			Part No.	Type	Part No.	Type
Plastic bowl guard						
MS4	Manual rotary	G⅛	**529463**	**MS4-LFM-⅛-ARM**	**529465**	**MS4-LFM-⅛-BRM**
		G¼	**529459**	**MS4-LFM-¼-ARM**	**529461**	**MS4-LFM-¼-BRM**
MS6	Manual rotary	G¼	**529663**	**MS6-LFM-¼-ARM**	**529667**	**MS6-LFM-¼-BRM**
		G⅜	**529671**	**MS6-LFM-⅜-ARM**	**529675**	**MS6-LFM-⅜-BRM**
		G½	**529655**	**MS6-LFM-½-ARM**	**529659**	**MS6-LFM-½-BRM**
	Fully automatic	G¼	**530510**	**MS6-LFM-¼-ARV**	**530514**	**MS6-LFM-¼-BRV**
		G⅜	**530518**	**MS6-LFM-⅜-ARV**	**–**	**–**
		G½	**530502**	**MS6-LFM-½-ARV**	**530506**	**MS6-LFM-½-BRV**
Integrated as metal bowl						
MS4	Fully automatic	G¼	**535768**	**MS4-LFM-¼-AUV**	**535766**	**MS4-LFM-¼-BUV**
MS6	Fully automatic	G¼	**529665**	**MS6-LFM-¼-AUV**	**–**	**–**
		G⅜	**529673**	**MS6-LFM-⅜-AUV**	**–**	**–**
		G½	**529657**	**MS6-LFM-½-AUV**	**529661**	**MS6-LFM-½-BUV**

Ordering data						
With differential pressure indicator						
Size	Condensate drain	Connection	Micro filter Grade of filtration 0.01 µm		Fine filter Grade of filtration 1 µm	
			Part No.	Type	Part No.	Type
Plastic bowl guard						
MS4	Manual rotary	G⅛	**536821**	**MS4-LFM-⅛-ARM-DA**	**–**	**–**
		G¼	**536822**	**MS4-LFM-¼-ARM-DA**	**536818**	**MS4-LFM-¼-BRM-DA**
MS6	Manual rotary	G¼	**536869**	**MS6-LFM-¼-ARM-DA**	**536833**	**MS6-LFM-¼-BRM-DA**
		G⅜	**536870**	**MS6-LFM-⅜-ARM-DA**	**–**	**–**
		G½	**536871**	**MS6-LFM-½-ARM-DA**	**536835**	**MS6-LFM-½-BRM-DA**
	Fully automatic	G½	**536877**	**MS6-LFM-½-ARV-DA**	**536841**	**MS6-LFM-½-BRV-DA**
Integrated as metal bowl						
MS4	Fully automatic	G¼	**537214**	**MS4-LFM-¼-AUV-DA**	**–**	**–**
MS6	Fully automatic	G½	**536883**	**MS6-LFM-½-AUV-DA**	**536847**	**MS6-LFM-½-BUV-DA**
Integrated as metal bowl and high flow rate						
MS6	Fully automatic	G½	**552926**	**MS6-LFM-½-AUV-HF-DA**	**552925**	**MS6-LFM-½-BUV-HF-DA**

Ordering data – Wearing parts kits		
Size	Part No.	Type
MS4	**673641**	**MS4-LFM**
MS6	**673642**	**MS6-LFM**

New
Variant EX4, UL1

Fine and micro filters MS4/MS6-LFM, MS series

Ordering data – Modular products

FESTO

M Mandatory data

Module No.	Series	Size		Function		Connection size		Grade of filtration		Bowl
527697 527670	MS	4, 6		LFM		⅛, ¼, ⅜, ½, AGA, AGB, AGC, AGD, AGE		B, A		R, U
Ordering example										
527697	**MS**	**4**	–	**LFM**	–	**AGB**	–	**B**	–	**R**

Ordering table

Grid dimension [mm]	40	62	Conditions	Code		Enter code
M Module No.	**527697**	**527670**				
Series	Standard			**MS**		MS
Size	4	6		**...**		
Function	Fine and micro filter			**-LFM**		-LFM
Connection size	Thread G⅛	–	1	**-⅛**		
	Thread G¼	Thread G¼	1	**-¼**		
	–	Thread G⅜	1	**-⅜**		
	–	Thread G½	1	**-½**		
	Connecting plate G⅛	–		**-AGA**		
	Connecting plate G¼	Connecting plate G¼		**-AGB**		
	Connecting plate G⅜	Connecting plate G⅜		**-AGC**		
	–	Connecting plate G½		**-AGD**		
	–	Connecting plate G¾		**-AGE**		
Grade of filtration	1 µm			**-B**		
	0.01 µm			**-A**		
Bowl	Plastic bowl with plastic bowl guard			**-R**		
	Metal bowl			**-U**		

1 **⅛, ¼, ⅜, ½, E2, E3, E4, DP, DN, DPI, DNI, WPM**
Not with EU certification EX4

Transfer order code

	MS		–	**LFM**	–		–		–	

Fine and micro filters MS4/MS6-LFM, MS series

Ordering data – Modular products

FESTO

➔ M Mandatory data | O Options

	Condensate drain		Flow rate		Range of application		Filter contamination sensing		Type of mounting		EU certification		UL certification		Flow direction
	M, H, V, E2, E3, E4		HF		HP		DA, DP, DN, DPI, DNI		WP, WPM, WB, WBM		EX4		UL1		Z
–	M	–		–		–		–		–		–		–	

Ordering table

	Grid dimension [mm]	40	62	Conditions	Code		Enter code
↓ M	Condensate drain	Manual			-M		
		Semi-automatic (P1 max. 12 bar)			-H		
		Fully automatic (P1 max. 12 bar)		2	-V		
		–	External fully automatic condensate drain, electrical, 110 V AC, terminals	1 3	-E2		
		–	External fully automatic condensate drain, electrical, 230 V AC, terminals	1 3	-E3		
		–	External fully automatic condensate drain, electrical, 24 V DC, terminals	1 3	-E4		
O	Flow rate	–	High flow rate		-HF		
	Range of application	–	Suitable for sealing air and cleaning air	4	-HP		
	Filter contamination sensing	Differential pressure indicator, visual			-DA		
		Filter contamination indicator, M8 plug, PNP, 3-pin		1 5	-DP		
		Filter contamination indicator, M8 plug, NPN, 3-pin		1 5	-DN		
		Filter contamination indicator, M12 plug, PNP, 4-pin, analogue output 4 ... 20 mA		1 5	-DPI		
		Filter contamination indicator, M12 plug, PNP, 4-pin, analogue output 4 ... 20 mA		1 5	-DNI		
	Type of mounting	Mounting bracket		6	-WP		
		Mounting bracket		1 6	-WPM		
		Mounting bracket			-WB		
		Mounting bracket	–		-WBM		
	EU certification	II 2GD to EU Directive 94/9/EG			-EX4		
	UL certification	cULus, ordinary location for Canada and USA			-UL1		
	Flow direction	Flow direction from right to left			-Z		

2 **V** Size 4: only with metal bowl U
3 **E2, E3, E4** Only with metal bowl U
4 **HP** Not with flow rate HF or filter contamination sensing DA
5 **DP, DN, DPI, DNI** Measuring range max. 10 bar
6 **WP, WPM** Only with connecting plate AGA, AGB, AGC, AGD or AGE

Transfer order code

–		–		–		–		–		–		–		–	

New
Variant EX4, UL1

Active carbon filters MS4/MS6-LFX, MS series

Technical data

Function

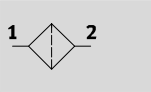

Flow rate
max. 2,500 l/min

Temperature range
−10 … +60 °C

Operating pressure
0 … 20 bar

www.festo.com

Note

Prefiltration with micro filter MS-LFM-A, grade of filtration 0.01 µm, recommended.

- Removal of liquid and gaseous oil particles from compressed air using active carbon
- Eliminates odours and vapours
- Optionally with filter cartridge for low flow rates, suitable for sealing air and cleaning air
- Optional device variant EX4 for use in potentially explosive areas in zones 1, 2, 21 and 22
- New filter cartridges ➔ 87

General technical data					
Size	MS4		MS6		
Pneumatic connection 1, 2	G⅛	G¼	G¼	G⅜	G½
Design	Active carbon filter				
Type of mounting	Via accessories				
	In-line installation				
Assembly position	Vertical ±5°				
Air purity class at the output[1]	Compressed air in accordance with ISO 8573-1:2010 [1:4:1]				
Bowl guard	Plastic bowl guard				
	Integrated as metal bowl				
Residual oil content [mg/m³]	≤0.003				

1) We recommend that the filter cartridge be replaced by a new one after 1,000 operating hours. (Applies to an ambient temperature of 21 °C. At higher temperatures the service life of the filter cartridge will be reduced.)
Note: This product conforms to ISO 1179-1 and to ISO 228-1

Standard flow rate q_n[1] [l/min]				
Size	MS4	MS6		
Variant	Standard	Standard	High flow rate HF	Range of application HP, suitable for sealing air and cleaning air
Max. standard flow rate for air purity class $q_{n\ max}$	360	900	2,500	900

1) Measured at p1 = 6 bar.

Active carbon filters MS4/MS6-LFX, MS series

Technical data

Operating and environmental conditions			
Size		MS4	MS6
Operating pressure	[bar]	0 … 14 (0 … 10)[1]	0 … 20 (0 … 10)[1]
Operating medium		Compressed air in accordance with ISO 8573-1:2010 [1:4:2]	
		Inert gases	
Ambient temperature	[°C]	−10 … +60	
Temperature of medium	[°C]	+5 … +30	
Storage temperature	[°C]	−10 … +60	
Corrosion resistance class CRC[2]		2	
UL certification		cULus recognized (OL)	

1) Value in brackets applies to MS4/MS6-LFX with UL certification.
2) Corrosion resistance class CRC 2 to Festo standard FN 940070
Moderate corrosion stress. Indoor applications in which condensation may occur. External visible parts with primarily decorative requirements for the surface and which are in direct contact with the ambient atmosphere typical for industrial applications.

ATEX	
EU certification	EX4
ATEX category gas	II 2G
Ex-ignition protection type gas	c T6 X
ATEX category dust	II 2D
EX-ignition protection type dust	c 60 °C X
ATEX ambient temperature	−10 °C ≤ Ta ≤ +60 °C
CE mark (see declaration of conformity)	To EU Explosion Protection Directive (ATEX)

Weights [g]			
Size	MS4	MS6	
Variant	Standard	Standard/Range of application HP	High flow rate HF
Active carbon filter with plastic bowl guard R	190	600	1,280
Active carbon filter with metal bowl U	350	820	1,500

Materials

Sectional view

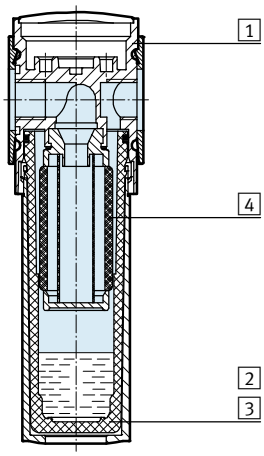

Active carbon filter		
1	Body	Die-cast aluminium
2	Plastic bowl guard	PC
3	Metal bowl	Wrought aluminium alloy, die-cast aluminium
	Viewing window	PA
4	Filters	Active carbon
–	Seals	NBR
Note on materials		RoHS-compliant
		Free of copper and PTFE

Active carbon filters MS4/MS6-LFX, MS series

Technical data

FESTO

Standard flow rate qn as a function of the differential pressure Δp1-2

MS4-LFX-⅛ and MS4-LFX-¼

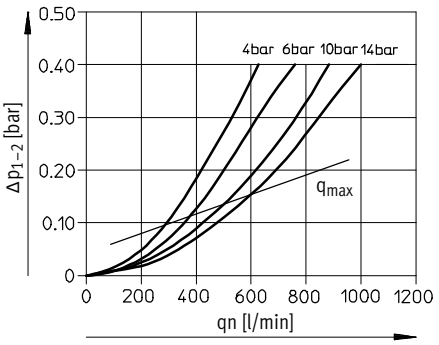

MS6-LFX-¼

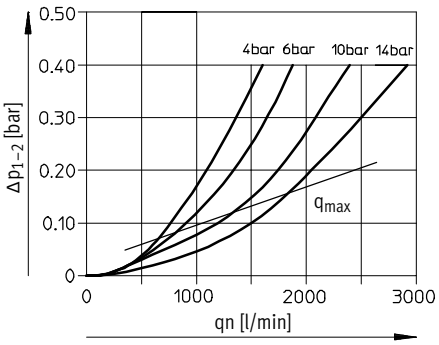

MS6-LFX-⅜

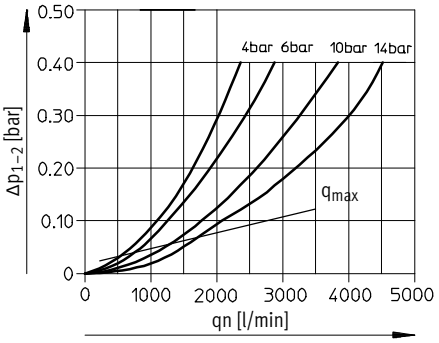

MS6-LFX-½

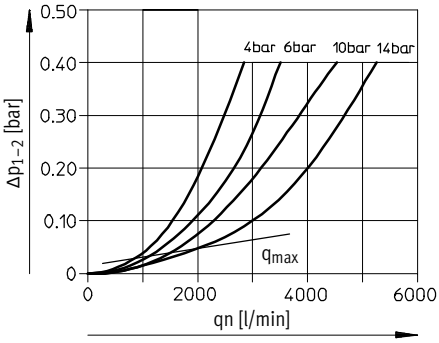

Standard flow rate qn as a function of the differential pressure p1-2

MS6-LFX-¼-...-HF

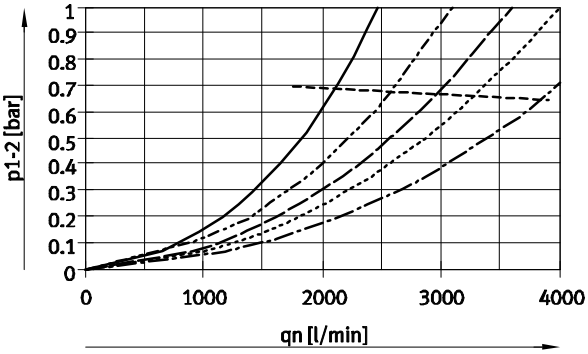

MS6-LFX-⅜-...-HF

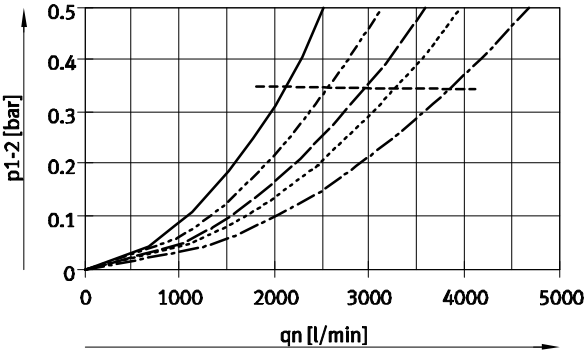

MS6-LFX-½-...-HF

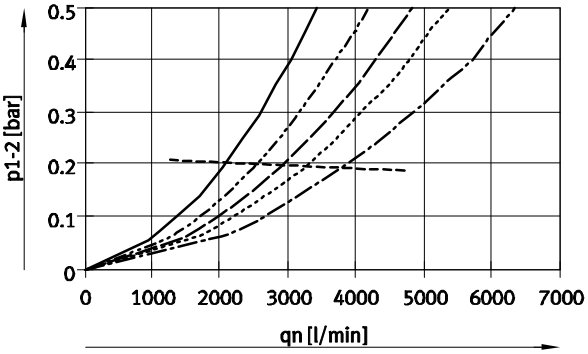

- p1: 4 bar
- p1: 6 bar
- p1: 8 bar
- p1: 10 bar
- p1: 14 bar
- q_{max}

Active carbon filters MS4/MS6-LFX, MS series

Technical data

Dimensions – Basic version Download CAD data ➔ **www.festo.com**

Standard/Range of application HP

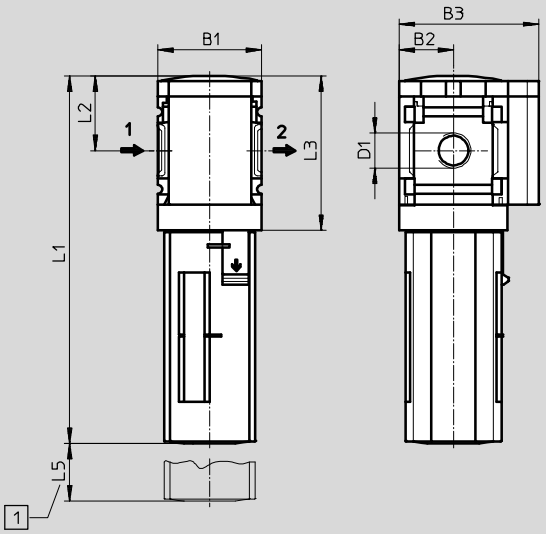

High flow rate HF

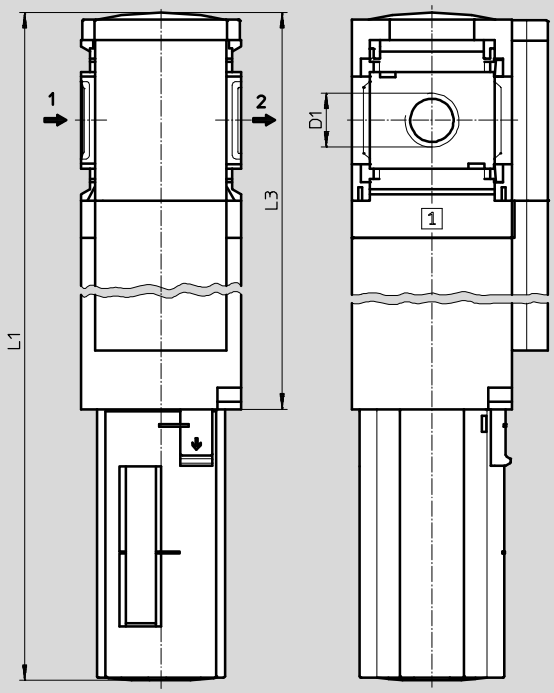

1 Installation dimensions

➔ Flow direction

Type	B1	B2	B3	D1	L1 Bowl guard Plastic	L1 Bowl guard Metal	L2	L3	L5
MS4-LFX-⅛	40	21	54	G⅛	142.8	160.4	29	60	73
MS4-LFX-¼				G¼					
MS6-LFX-¼	62	31	76	G¼	192	198	42	87	100
MS6-LFX-⅜				G⅜					
MS6-LFX-½				G½					
MS6-LFX-¼-...-HF	62	31	76	G¼	312	318	42	207	100
MS6-LFX-⅜-...-HF				G⅜					
MS6-LFX-½-...-HF				G½					

Note: This product conforms to ISO 1179-1 and to ISO 228-1

Ordering data

Size	Connection	Plastic bowl guard Part No.	Plastic bowl guard Type	Integrated as metal bowl Part No.	Integrated as metal bowl Type
MS4	G⅛	–	–	**536709**	**MS4-LFX-⅛-U**
	G¼	**529467**	**MS4-LFX-¼-R**	**535782**	**MS4-LFX-¼-U**
MS6	G¼	**529683**	**MS6-LFX-¼-R**	**529685**	**MS6-LFX-¼-U**
	G⅜	**529687**	**MS6-LFX-⅜-R**	–	–
	G½	**529679**	**MS6-LFX-½-R**	**529681**	**MS6-LFX-½-U**
High flow rate					
MS6	G½	–	–	**552927**	**MS6-LFX-½-U-HF**

New
Variant EX4, UL1

Activated carbon filters MS4/MS6-LFX, MS series

Ordering data – Modular products

FESTO

M Mandatory data

Module No.	Series	Size		Function		Connection size		Bowl
527699 527672	MS	4 6		LFX		⅛, ¼, ⅜, ½, AGA, AGB, AGC, AGD, AGE		R, U
Ordering example								
527699	**MS**	**4**	–	**LFX**	–	**AGB**	–	**R**

Ordering table

Grid dimension [mm]	40	62	Conditions	Code		Enter code
M Module No.	**527699**	**527672**				
Series	Standard			**MS**		MS
Size	4	6		**...**		
Function	Activated carbon filter			**-LFX**		-LFX
Connection size	Thread G⅛	–	1	**-⅛**		
	Thread G¼	Thread G¼	1	**-¼**		
	–	Thread G⅜	1	**-⅜**		
	–	Thread G½	1	**-½**		
	Connecting plate G⅛	–		**-AGA**		
	Connecting plate G¼	Connecting plate G¼		**-AGB**		
	Connecting plate G⅜	Connecting plate G⅜		**-AGC**		
	–	Connecting plate G½		**-AGD**		
	–	Connecting plate G¾		**-AGE**		
Bowl	Plastic bowl with plastic bowl guard			**-R**		
	Metal bowl			**-U**		

1 **⅛, ¼, ⅜, ½, WPM**
Not with EU certification EX4

Transfer order code

	MS		–	**LFX**	–		–	

Activated carbon filters MS4/MS6-LFX, MS series

Ordering data – Modular products

FESTO

➔ 0 **Options**

Flow rate	Range of application	Type of mounting	EU certification	UL certification	Alternative flow direction
HF	HP	WP, WPM, WB, WBM	EX4	UL1	Z
–	–	– **WP**	–	–	–

Ordering table

Grid dimension [mm]		40	62	Conditions	Code		Enter code
0	Flow rate	–	High flow rate		**-HF**		
	Range of application	–	Suitable for sealing air and cleaning air	2	**-HP**		
	Type of mounting	Mounting bracket		3	**-WP**		
		Mounting bracket		1 3	**-WPM**		
		Mounting bracket			**-WB**		
		Mounting bracket	–		**-WBM**		
	EU certification	II 2GD to EU Directive 94/9/EG			**-EX4**		
	UL certification	cULus, ordinary location for Canada and USA			**-UL1**		
	Alternative flow direction	Flow direction from right to left			**-Z**		

2 **HP** Not with flow rate HF

3 **WP, WPM** Only with connecting plate AGA, AGB, AGC, AGD or AGE

Transfer order code

– _____ – _____ – _____ – _____ – _____ – _____

Filters MS9-LF, MS series

Peripherals overview

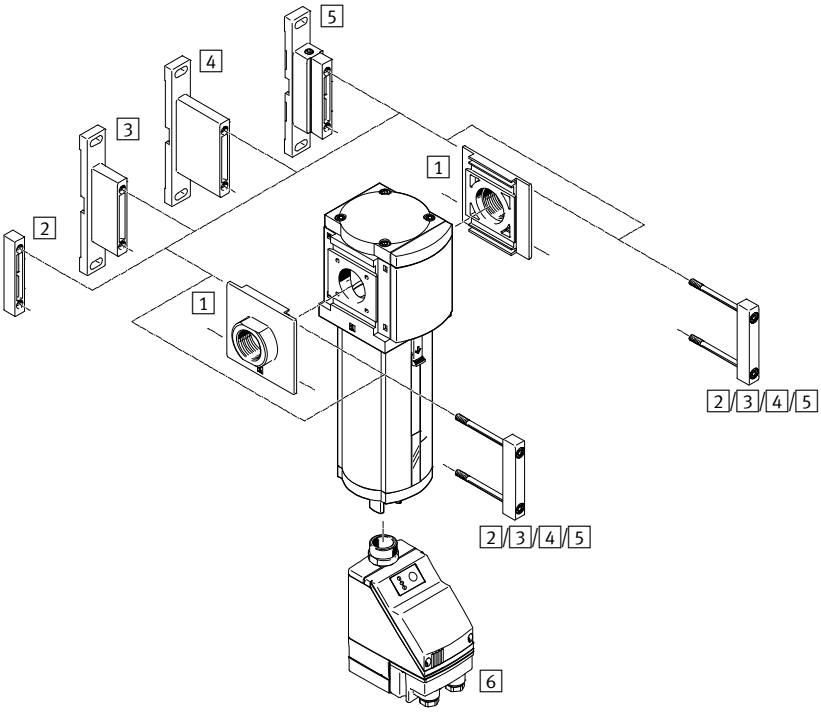

Note

Additional accessories:
- Module connector for combination with size MS6, MS9 or MS12
  ➔ Internet: rmv, armv

Mounting attachments and accessories		Individual device			Combination	➔ Page/ Internet
		With female thread ¾ or 1	With connecting plate AG...		Module without connecting thread, without connecting plate G	
			Without EU certification EX4	With EU certification EX4		
1	Connecting plate-SET MS9-AG...	–	■	■	■	ms9-ag
2	Module connector MS9-MV	–	–	–	■	ms9-mv
3	Mounting bracket MS9-WP	■	■	■	■	ms9-wp
4	Mounting bracket MS9-WPB	■	■	■	■	ms9-wp
5	Mounting bracket MS9-WPM	■	■	–	■	ms9-wp
6	Condensate drain, fully automatic, electrically actuated E2/E3/E4	■	■	–	■	42

Filters MS9-LF, MS series

Type codes

MS	9	–	LF	–	G	–	E	U	M

Series	
MS	Standard service unit

Size	
9	Grid dimension 90 mm

Service function	
LF	Filter

Connection size	
G	Module without connecting thread, without connecting plate

Grade of filtration	
C	5 µm
E	40 µm

Bowl guard	
U	Integrated as metal bowl

Condensate drain	
M	Manual rotary
V	Fully automatic

Additional variants can be ordered using the modular system ➔ 42

- Connecting plates
- Condensate drain
- Type of mounting
- EU certification
- UL certification
- Alternative flow direction

New
Variant EX4, UL1

Filters MS9-LF, MS series

Technical data

Condensate drain,
manual rotary

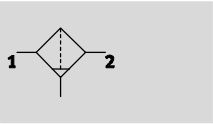

Condensate drain,
semi or fully automatic

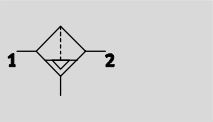

Flow rate
6,000 … 16,000 l/min

Temperature range
–10 … +60 °C

Operating pressure
0 … 20 bar

- Good particle and condensate separation
- High flow rate with minimal pressure drop
- Available with manual, semi-automatic, fully automatic or fully automatic, electrically actuated condensate drain
- Choice of filter cartridges: 5 µm or 40 µm
- New filter cartridges ➔ 88
- Optional device variant EX4 for use in potentially explosive areas in zones 1, 2, 21 and 22

General technical data				
Size	MS9			
Pneumatic connection 1, 2	G¾	G1	G1½ … G1½ (with connecting plate AG…)	– (without connecting thread G)
Design	Sintered filter with centrifugal separator			
Type of mounting	Via accessories			
	In-line installation			
Mounting position	Vertical ±5°			
Grade of filtration [µm]	5			
	40			
Air purity class at the output	Compressed air in accordance with ISO 8573-1:2010 [6:8:4] (grade of filtration 5 µm)			
	Compressed air in accordance with ISO 8573-1:2010 [7:8:4] (grade of filtration 40 µm)			
Bowl guard	Integrated as metal bowl			
Condensate drain	Manual rotary			
	Semi-automatic			
	Fully automatic			
	Fully automatic, electrically actuated			
Max. condensate volume [ml]	220			

Note: This product conforms to ISO 1179-1 and to ISO 228-1

Standard nominal flow rate qnN[1] [l/min]				
Pneumatic connection		Connecting plate AGD	Thread G¾ or connecting plate AGE	Thread G1 or connecting plate AGF/AGG/AGH
Grade of filtration	5 µm	6,000	8,500	9,500
	40 µm	8,000	12,500	16,000

1) Measured at p1 = 6 bar and Δp = 1 bar

Filters MS9-LF, MS series

Technical data

Operating and environmental conditions				
Condensate drain	Manual rotary M	Semi-automatic H	Fully automatic V	Fully automatic, electrically actuated E2/E3/E4
Operating pressure [bar]	0 … 20	1.5 … 12	2 … 12	1 … 16
Operating medium	Compressed air in accordance with ISO 8573-1:2010 [–:9:–]	Compressed air in accordance with ISO 8573-1:2010 [–:9:–]	Compressed air in accordance with ISO 8573-1:2010 [7:9:–]	Compressed air in accordance with ISO 8573-1:2010 [–:9:–]
Ambient temperature [°C]	–10 … +60	+5 … +60	+5 … +60	+1 … +60
Temperature of medium [°C]	–10 … +60	+5 … +60	+5 … +60	+1 … +60
Storage temperature [°C]	–10 … +60	+5 … +60	+5 … +60	+1 … +60
Corrosion resistance class CRC[1)]	2			
UL certification	cULus recognized (OL)			

1) Corrosion resistance class CRC 2 to Festo standard FN 940070
Moderate corrosion stress. Indoor applications in which condensation may occur. External visible parts with primarily decorative requirements for the surface and which are in direct contact with the ambient atmosphere typical for industrial applications.

ATEX	
EU certification	EX4
ATEX category gas	II 2G
Ex-ignition protection type gas	c T6 X
ATEX category dust	II 2D
EX-ignition protection type dust	c T60 °C X
ATEX ambient temperature	–10 °C ≤ Ta ≤ +60 °C (manual rotary condensate drain M)
	+5 °C ≤ Ta ≤ +60 °C (semi-automatic/fully automatic condensate drain H/V)
CE mark (see declaration of conformity)	To EU Explosion Protection Directive (ATEX)

Weight [g]	
Filter	2,000
Filter with condensate drain, fully automatic, electrically actuated E2/E3/E4	2,400

Materials

Sectional view

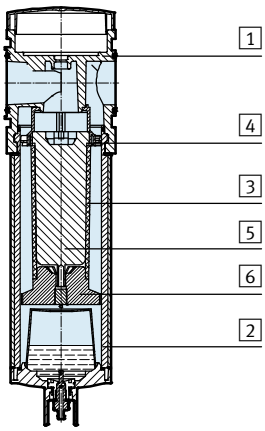

Filter		
1	Housing	Die-cast aluminium
2	Bowl	Wrought aluminium alloy
	Inspection window	PA
3	Filter	PE
4	Spin disc	POM
5	Filter holder	POM
6	Separating plate	POM
–	Cover	PA reinforced
–	Connecting plate, module connector, mounting bracket	Die-cast aluminium
–	Seals	NBR
Note on materials		RoHS-compliant (not with variant E2, E3 or E4)

Filters MS9-LF, MS series

Technical data

FESTO

Standard flow rate qn as a function of differential pressure Δp1-2

Grade of filtration 5 µm
MS9-LF-1/AGF, pneumatic connection G1

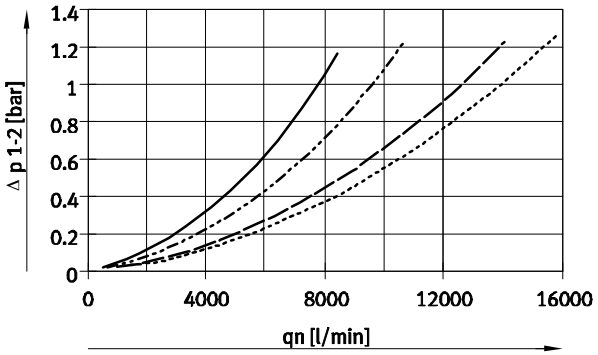

Grade of filtration 40 µm
MS9-LF-1/AGF, pneumatic connection G1

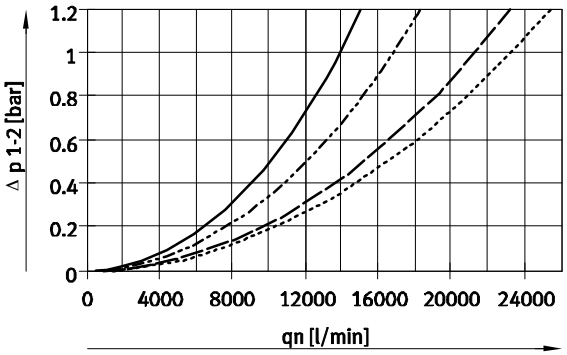

4 bar
6 bar
10 bar
12 bar

Dimensions – Basic version

Download CAD data ➔ **www.festo.com**

Without connecting thread G

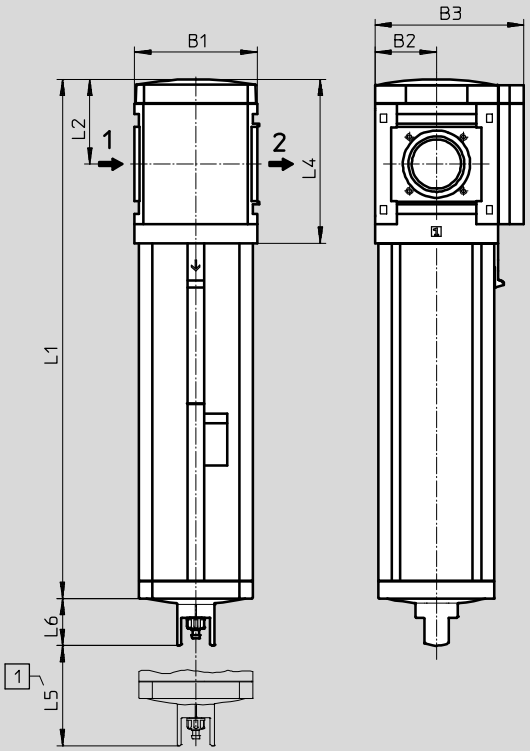

1 Installation dimensions

➔ Flow direction

Type	B1	B2	B3	L1	L2	L4	L5	L6
MS9-LF-G	90	45	109	310.5	62	120	150	34.5

Filters MS9-LF, MS series

Technical data

FESTO

Dimensions – Connecting thread/connecting plate

Download CAD data ➔ **www.festo.com**

With connecting thread ¾ or 1

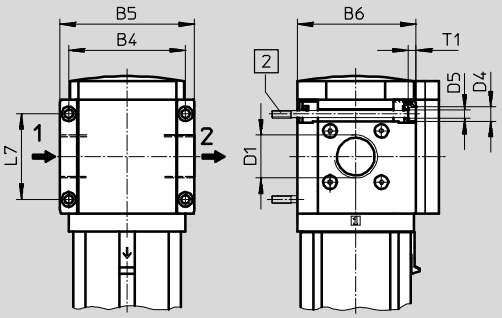

With connecting plate AG...

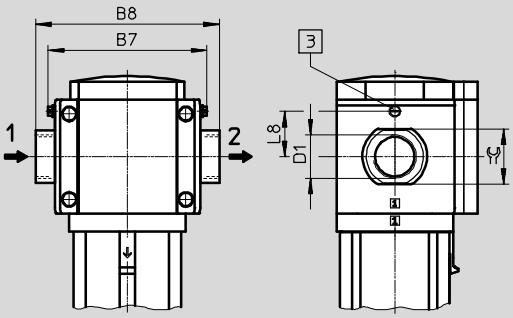

2 Mounting screw M6xmin.90 to DIN 912 (not included in the scope of delivery) for wall mounting without mounting bracket

3 Earthing screw M4x8 (only with MS9-...-EX4)

➔ Flow direction

Type	B4	B5	B6	B7		B8	D1	D4	D5	L7	L8	T1	⬡
					EX4						EX4		
MS9-LF-¾	90	104	91.5	–	–	–	G¾	11	6.5	66	–	6	–
MS9-LF-1							G1						
MS9-LF-AGD	–	–	–	112	122	132	G½	–	–	–	35	–	30
MS9-LF-AGE						132	G¾						36
MS9-LF-AGF						142	G1						41
MS9-LF-AGG						162	G1¼						50
MS9-LF-AGH						176	G1½						55

Note: This product conforms to ISO 1179-1 and to ISO 228-1

Dimensions – Condensate drain

Download CAD data ➔ **www.festo.com**

Manual rotary M/fully automatic V

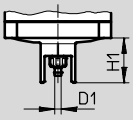

Barbed fitting for plastic tubing PCN-4

Semi-automatic H

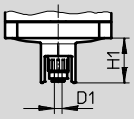

QS connector for plastic tubing PUN-6/PAN-6

Fully automatic, electrically actuated E2/E3/E4

Technical data ➔ Internet: pwea

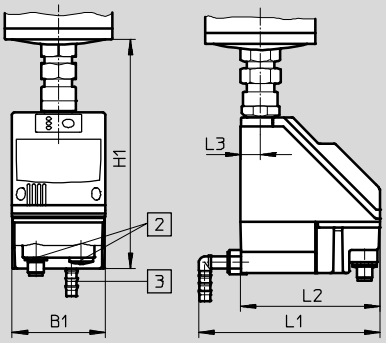

Condensate drain PWEA:

2 Electrical connection: Screw terminal PG9

3 Connection 360° rotatable for plastic tubing PUN-H-12x2

Type	B1	D1	H1	L1	L2	L3
MS9-LF-...-M/V	–	5	34.5	–	–	–
MS9-LF-...-H		6				
MS9-LF-...-E2/E3/E4	72	–	178	140	108	15

Ordering data

Size	Condensate drain	Connection	Grade of filtration 5 µm		Grade of filtration 40 µm	
			Part No.	Type	Part No.	Type
MS9	Manual rotary	–	**564108**	**MS9-LF-G-CUM**	**564106**	**MS9-LF-G-EUM**
	Fully automatic	–	**564109**	**MS9-LF-G-CUV**	**564107**	**MS9-LF-G-EUV**

New
Variant EX4, UL1

Filters MS9-LF, MS series

Ordering data – Modular products

FESTO

M Mandatory data

Module No.	Series	Size		Function		Connection size		Grade of filtration		Bowl
562532	MS	9		LF		¾, 1, AGD, AGE, AGF, AGG, AGH, G		E, C		U
Ordering example										
562532	**MS**	**9**	–	**LF**	–	**AGD**	–	**E**	–	**U**

Ordering table

Grid dimension [mm]		90	Condi-tions	Code		Enter code
M	Module No.	**562532**				
	Series	Standard		**MS**		MS
	Size	9		**9**		9
	Function	Filter		**-LF**		-LF
	Connection size	Thread G¾	1	**-¾**		
		Thread G1	1	**-1**		
		Connecting plate G½		**-AGD**		
		Connecting plate G¾		**-AGE**		
		Connecting plate G1		**-AGF**		
		Connecting plate G1¼		**-AGG**		
		Connecting plate G1½		**-AGH**		
		Module without connecting thread, without connecting plate	1	**-G**		
	Grade of filtration	40 µm		**-E**		
		5 µm		**-C**		
↓	Bowl	Metal bowl		**-U**		-U

1 **¾, 1, G, E2, E3, E4, WPM**
Not with EU certification EX4

Transfer order code

562532	**MS**	**9**	–	**LF**	–		–		–	**U**

Filters MS9-LF, MS series

Ordering data – Modular products

FESTO

➔ M Mandatory data		O Options						
	Condensate drain		Type of mounting		EU certification		UL certification		Alternative flow direction
	M, H, V, E2, E3, E4		WP, WPM, WPB		EX4		UL1		Z
–	M	–	WP	–		–		–	Z

Ordering table

Grid dimension		[mm] 90	Condi-tions	Code		Enter code
↓ M	Condensate drain	Manual		-M		
		Semi-automatic (P1 max. 12 bar)		-H		
		Fully automatic (P1 max. 12 bar)		-V		
	External, fully automatic, electric	110 V AC, terminals (P1 max. 16 bar)	1	-E2		
		230 V AC, terminals (P1 max. 16 bar)	1	-E3		
		24 V DC, terminals (P1 max. 16 bar)	1	-E4		
O	Type of mounting	Mounting bracket	2	-WP		
		Mounting bracket	1 2	-WPM		
		Mounting bracket for large wall gap	2	-WPB		
	EU certification	II 2GD to EU Directive 94/9/EG		-EX4		
	UL certification	cULus, ordinary location for Canada and USA		-UL1		
	Alternative flow direction	Flow direction from right to left		-Z		

1 **¾, 1, G, E2, E3, E4, WPM**
Not with EU certification EX4

2 **WP, WPM, WPB** Not with module G

Transfer order code

–		–		–		–		–	

New
Variant EX4, UL1

Fine and micro filters MS9-LFM, MS series

Peripherals overview

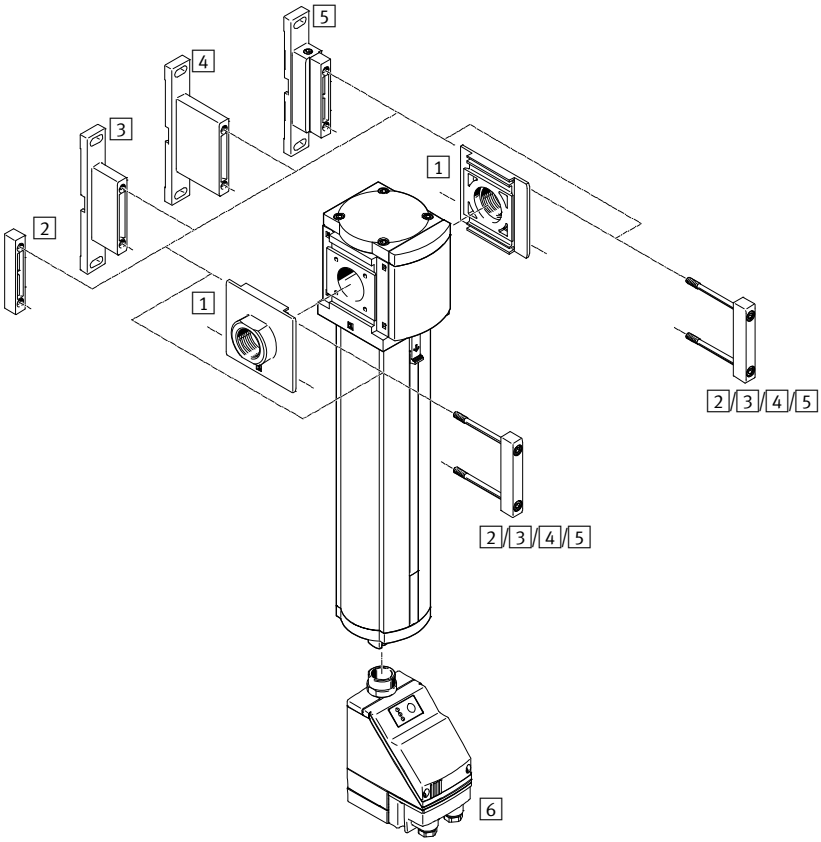

Note

Other accessories:
- Module connector for combination with size MS6, MS9 or MS12
  ➔ Internet: rmv, armv

Mounting attachments and accessories		Individual device			Combination	➔ Page/ Internet
		With female thread ¾ or 1	With connecting plate AG...		Module without connecting thread, without connecting plate G	
			Without EU certification EX4	With EU certification EX4		
1	Connecting plate-SET MS9-AG...	–	■	■	■	ms9-ag
2	Module connector MS9-MV	–	–	–	■	ms9-mv
3	Mounting bracket MS9-WP	■	■	■	■	ms9-wp
4	Mounting bracket MS9-WPB	■	■	■	■	ms9-wp
5	Mounting bracket MS9-WPM	■	■	–	■	ms9-wp
6	Condensate drain, fully automatic, electrically actuated E2/E3/E4	■	■	–	■	56

Fine and micro filters MS9-LFM, MS series

Type codes

MS	9	–	LFM	–	1	–	A	U	M	–	HF	–	DA

Series	
MS	Standard service unit

Size	
9	Grid dimension 90 mm

Service function	
LFM	Fine and micro filter

Pneumatic connection	
¾	Thread G¾
1	Thread G1
G	Module without connecting thread, without connecting plate

Grade of filtration	
A	0.01 µm
B	1 µm

Bowl guard	
U	Integrated as metal bowl

Condensate drain	
M	Manual rotary
V	Fully automatic

Flow rate	
	Standard
HF	High flow rate

Filter contamination sensor	
	Without differential pressure indicator
DA	Differential pressure indicator

Further variants can be ordered using the modular system ➔ 56

- Connecting plates
- Condensate drain
- Type of mounting
- EU certification
- UL certification
- Alternative flow direction

New
Variant EX4, UL1

Fine and micro filters MS9-LFM, MS series

Technical data

Condensate drain
Manual rotary
Without differential pressure indicator

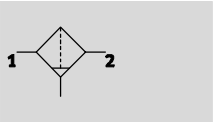

With differential pressure indicator

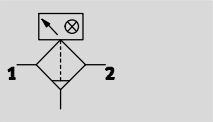

Condensate drain
Semi or fully automatic
Without differential pressure indicator

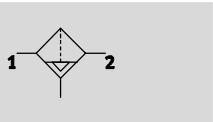

With differential pressure indicator

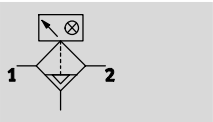

Flow rate
325 … 10,000 l/min

Temperature range
–10 … +60 °C

Operating pressure
0 … 20 bar

- High-performance filter for exceptionally clean compressed air
- Air quality to ISO 8573-1:2010
- Available with manual, semi-automatic, fully automatic or fully automatic, electrically actuated condensate drain
- Available with differential pressure indicator for indication of contamination
- Choice of filter cartridges: 0.01 µm or 1 µm
- New filter cartridges ➔ 88
- Optional device variant EX4 for use in potentially explosive areas in zones 1, 2, 21 and 22

General technical data				
Size	MS9			
Pneumatic connection 1, 2	G¾	G1	G½ … G1½ (with connecting plate AG…)	– (without connecting thread G)
Constructional design	Fibre filter			
Type of mounting	Via accessories			
	In-line installation			
Installation position	Vertical ±5°			
Grade of filtration [µm]	0.01 (micro filter MS9-LFM-A)			
	1 (fine filter MS9-LFM-B)			
Air purity class at the output	Compressed air in accordance with ISO 8573-1:2010 [1:7:2] (micro filter MS9-LFM-A)			
	Compressed air in accordance with ISO 8573-1:2010 [2:7:3] (fine filter MS9-LFM-B)			
Filter efficiency [%]	99.9999 (Grade of filtration 0.01 µm, micro filter MS9-LFM-A)			
	99.99 (Grade of filtration 1 µm, fine filter MS9-LFM-B)			
Bowl guard	Integrated as metal bowl			
Condensate drain	Manual rotary			
	Semi-automatic			
	Fully automatic			
	Fully automatic, electrically actuated			
Differential pressure indicator	Visual indicator			
Residual oil content [mg/m³]	≤0.01 (micro filter MS9-LFM-A) ≤0.5 (fine filter MS9-LFM-B)			
Max. condensate volume [cm³]	225			

Note: This product conforms to ISO 1179-1 and to ISO 228-1

Fine and micro filters MS9-LFM, MS series

Technical data

Standard flow rate q_n[1] [l/min]		
Version	Standard	High flow rate HF
Micro filter MS9-LFM-A		
Max. standard flow rate for air purity class $q_{n\ max}$	6,500	7,800
Min. standard flow rate for air purity class $q_{n\ min}$	325	390
Fine filter MS9-LFM-B		
Max. standard flow rate for air purity class $q_{n\ max}$	7,000	10,000
Min. standard flow rate for air purity class $q_{n\ min}$	350	500

1) Measured at p1 = 6 bar

Operating and environmental conditions				
Condensate drain	Manual rotary M	Semi-automatic H	Fully automatic V	Fully automatic, electrically actuated E2/E3/E4
Operating pressure [bar]	0 … 20	1.5 … 12	2 … 12	0.8 … 16
Operating medium	Compressed air in accordance with ISO 8573-1:2010 [6:8:4][1]			
Ambient temperature [°C]	−10 … +60	+5 … +60	+5 … +60	+1 … +60
Temperature of medium [°C]	−10 … +60	+5 … +60	+5 … +60	+1 … +60
Storage temperature [°C]	−10 … +60	+5 … +60	−10 … +60	+1 … +60
Corrosion resistance class CRC[2]	2			
UL certification	cULus recognized (OL)			

1) It is recommended to prefilter the compressed air for the micro filter MS-LFM-A using a fine filter MS-LFM-B (grade of filtration 1 µm).
2) Corrosion resistance class CRC 2 to Festo standard FN 940070
Moderate corrosion stress. Indoor applications in which condensation may occur. External visible parts with primarily decorative requirements for the surface and which are in direct contact with the ambient atmosphere typical for industrial applications.

ATEX	
EU certification	EX4
ATEX category gas	II 2G
Ex-ignition protection type gas	c T6 X
ATEX category dust	II 2D
EX-ignition protection type dust	c T60 °C X
ATEX ambient temperature	−10 °C ≤ Ta ≤ +60 °C (manual rotary condensate drain M)
	+5 °C ≤ Ta ≤ +60 °C (semi-automatic/fully automatic condensate drain H/V)
CE mark (see declaration of conformity)	To EU Explosion Protection Directive (ATEX)

Fine and micro filters MS9-LFM, MS series

Technical data

Weights [g]		
Version	Standard	High flow rate HF
Fine and micro filter	2,000	2,500
Fine and micro filter with condensate drain fully automatic, electrically actuated E2/E3/E4	2,900	2,900

Materials

Sectional view

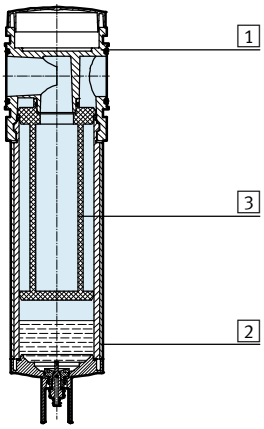

Fine and micro filters		
1	Housing	Die-cast aluminium
2	Bowl	Wrought aluminium alloy
	Inspection window	PA
3	Filter	Borosilicate fibre
–	Cover	PA reinforced
–	Connecting plate, module connector, mounting bracket	Die-cast aluminium
–	Seals	NBR
Note on materials		Free of copper and PTFE

Fine and micro filters MS9-LFM, MS series

Technical data

Standard flow rate qn as a function of the differential pressure p1-2

Grade of filtration 0.01 µm
MS9-LFM-AGD, Pneumatic connection G½

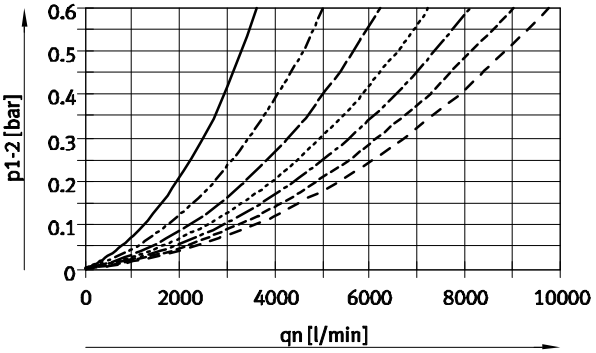

Grade of filtration 0.01 µm
MS9-LFM-¾/AGE, Pneumatic connection G¾

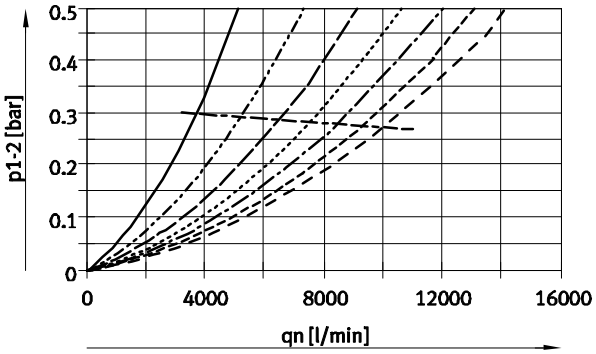

Grade of filtration 0.01 µm
MS9-LFM-1/AGF, Pneumatic connection G1

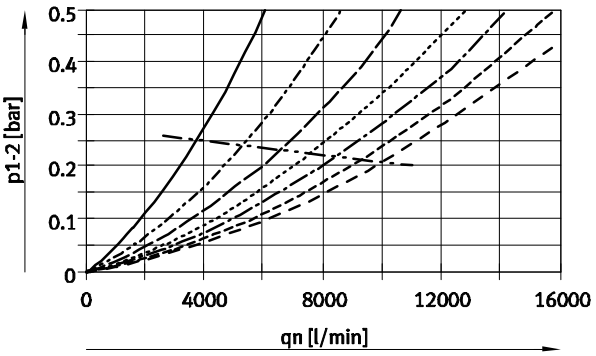

Grade of filtration 0.01 µm
MS9-LFM-AGG, Pneumatic connection G1¼

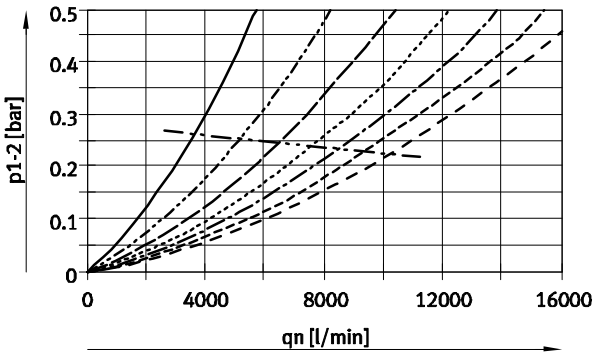

Grade of filtration 0.01 µm
MS9-LFM-AGH, Pneumatic connection G1½

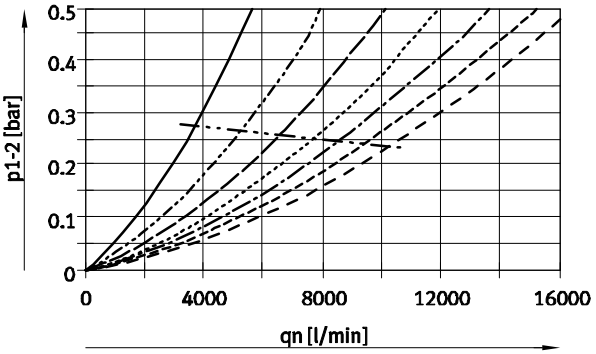

- 2 bar
- 4 bar ($q_{n\ min}$: 268 l/min)
- 6 bar ($q_{n\ min}$: 325 l/min)
- 8 bar
- 10 bar ($q_{n\ min}$: 420 l/min)
- 12 bar
- 14 bar ($q_{n\ min}$: 498 l/min)
- $q_{n\ max}$
  (with MS9-LFM-AGD: $q_{n\ max}$-values lie above the measured q_n-values)

Fine and micro filters MS9-LFM, MS series

Technical data

FESTO

Standard flow rate qn as a function of the differential pressure p1-2

Grade of filtration 1 µm
MS9-LFM-AGD, Pneumatic connection G1½

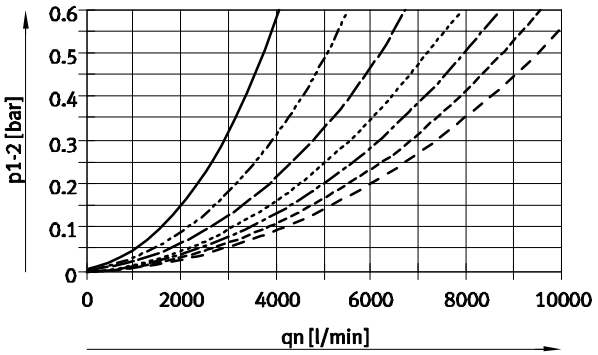

Grade of filtration 1 µm
MS9-LFM-¾/AGE, Pneumatic connection G¾

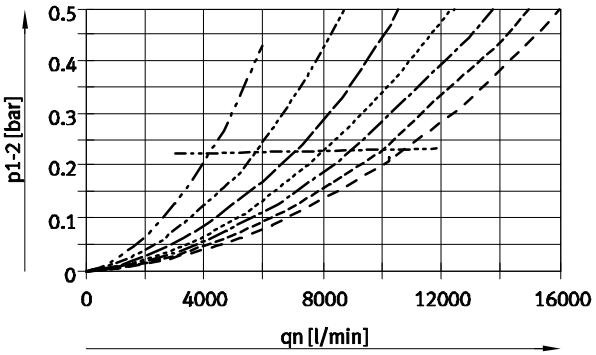

Grade of filtration 1 µm
MS9-LFM-1/AGF, Pneumatic connection G1

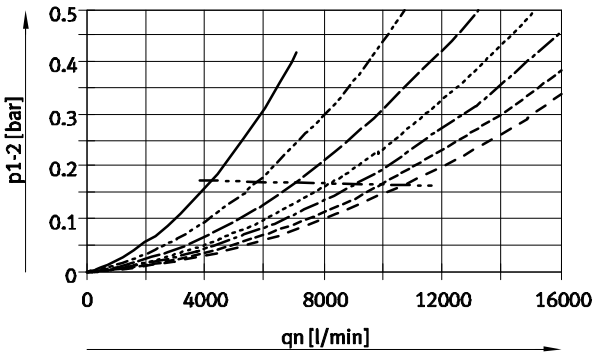

Grade of filtration 1 µm
MS9-LFM-AGG, Pneumatic connection G1¼

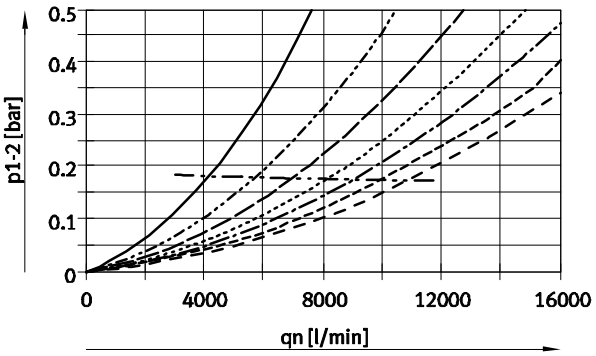

Grade of filtration 1 µm
MS9-LFM-AGH, Pneumatic connection G1½

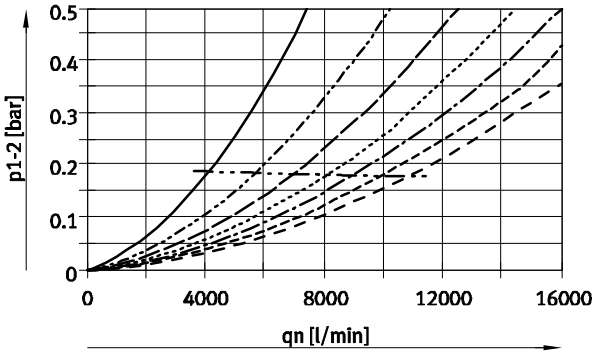

- 2 bar
- 4 bar ($q_{n\ min}$: 289 l/min)
- 6 bar ($q_{n\ min}$: 350 l/min)
- 8 bar
- 10 bar ($q_{n\ min}$: 450 l/min)
- 12 bar
- 14 bar ($q_{n\ min}$: 540 l/min)
- $q_{n\ max}$
  (with MS9-LFM-AGD: $q_{n\ max}$-values lie above the measured q_n-values)

Fine and micro filters MS9-LFM, MS series

Technical data

Standard flow rate qn as a function of the differential pressure p1-2

Grade of filtration 0.01 µm
MS9-LFM-¾-...-HF, Pneumatic connection G¾

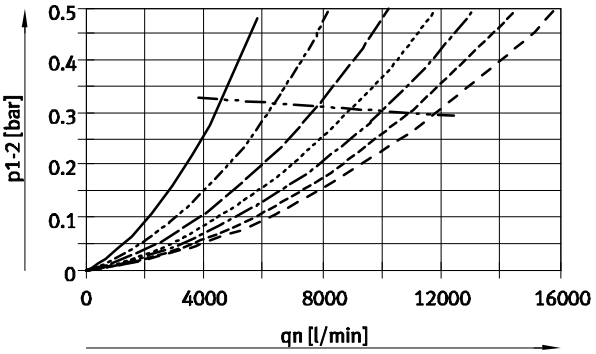

Grade of filtration 0.01 µm
MS9-LFM-1-...-HF, Pneumatic connection G1

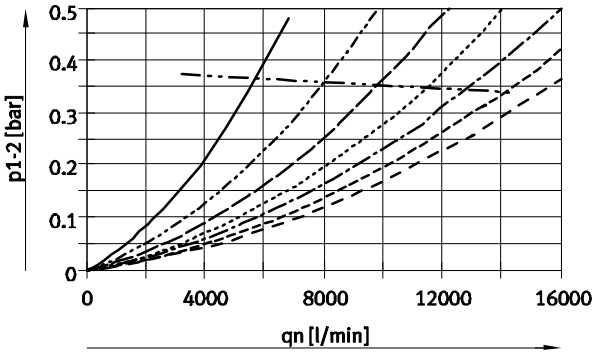

- 2 bar
- 4 bar
- 6 bar ($q_{n\ min}$: 390 l/min)
- 8 bar
- 10 bar
- 12 bar
- 14 bar
- $q_{n\ max}$

Grade of filtration 1 µm
MS9-LFM-¾-...-HF, Pneumatic connection G¾

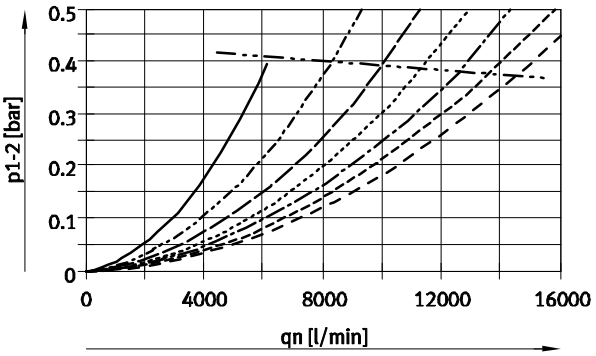

Grade of filtration 1 µm
MS9-LFM-1-...-HF, Pneumatic connection G1

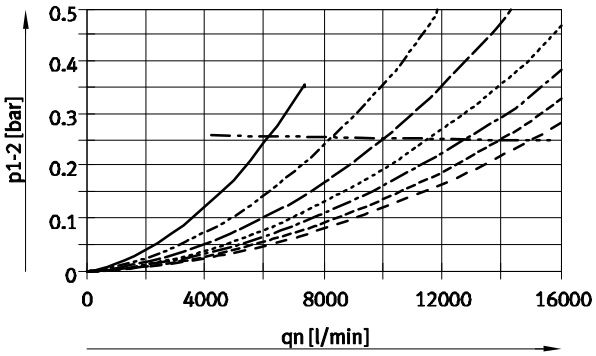

- 2 bar
- 4 bar
- 6 bar ($q_{n\ min}$: 500 l/min)
- 8 bar
- 10 bar
- 12 bar
- 14 bar
- $q_{n\ max}$

Fine and micro filters MS9-LFM, MS series

Technical data

FESTO

Dimensions – Basic version Download CAD data ➔ **www.festo.com**

without connecting thread G

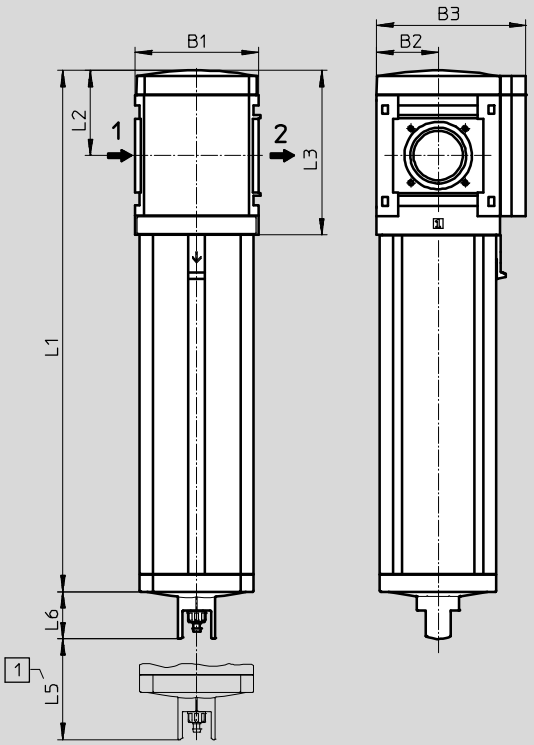

without connecting thread G, with differential pressure indicator DA

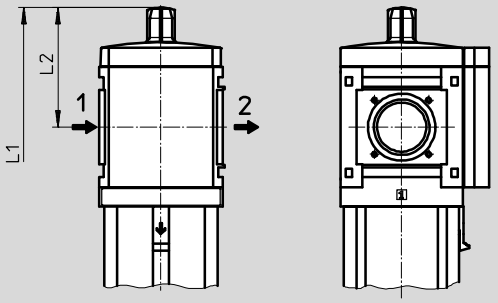

1 Installation dimensions

➔ Flow direction

Type	B1	B2	B3	L1		L2	L3	L5	L6
				Standard	High flow rate HF				
MS9-LFM-G	90	45	109	380.5	480.5	62	120	50	34.5
MS9-LFM-G-...-DA				405.5	505.5	87			

Fine and micro filters MS9-LFM, MS series

Technical data

Dimensions – Connecting thread/connecting plate Download CAD data ➔ **www.festo.com**

with connecting thread ¾ or 1

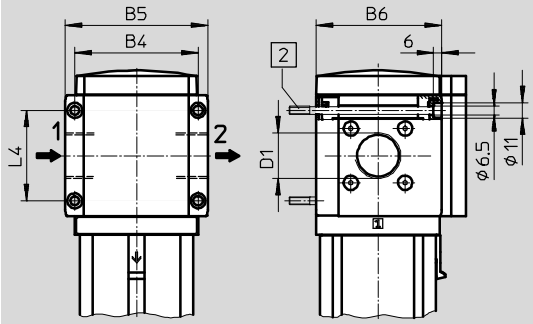

with connecting plate AG...

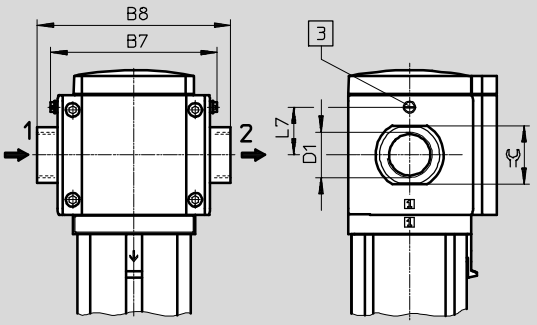

2 Mounting screw M6xmin.90 to DIN 912 (not included in scope of delivery) for wall mounting without mounting bracket

3 Earthing screw M4x8 (only with MS9-...-EX4)

➔ Flow direction

Type	B4	B5	B6	B7		B8	D1	L4	L7	⌀
					EX4				EX4	
MS9-LFM-¾	90	104	91.5	–	–	–	G¾	66	–	–
MS9-LFM-1							G1			
MS9-LFM-AGD	–	–	–	112	122	132	G½	–	35	30
MS9-LFM-AGE						132	G¾			36
MS9-LFM-AGF						142	G1			41
MS9-LFM-AGG						162	G1¼			50
MS9-LFM-AGH						176	G1½			55

Note: This product conforms to ISO 1179-1 and to ISO 228-1

Fine and micro filters MS9-LFM, MS series

Technical data

FESTO

Dimensions – Condensate drain Download CAD data ➔ **www.festo.com**

Manual rotary M/fully automatic V

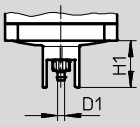

Barbed fitting for plastic tubing
PCN-4

Semi-automatic H

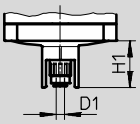

QS connector for plastic tubing
PUN-6/PAN-6

Fully automatic, electrically actuated E2/E3/E4 Technical data ➔ Internet: pwea

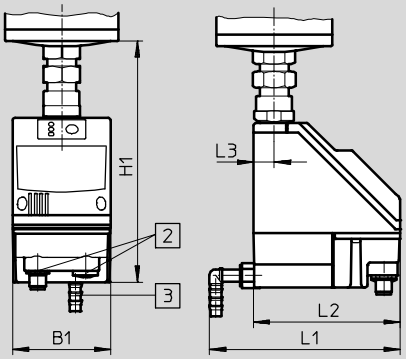

Condensate drain PWEA:

2 Electrical connection: Screw terminal PG9

3 Connection 360° rotatable for plastic tubing PUN-H-12x2

Type	B1	D1	H1	L1	L2	L3
MS9-LFM-...-M/V	–	5	34.5	–	–	–
MS9-LFM-...-H		6				
MS9-LFM-...-E2/E3/E4	72	–	178	140	108	15

Fine and micro filters MS9-LFM, MS series

Technical data

Ordering data						
Without differential pressure indicator						
Size	Condensate drain	Connection	Micro filter Grade of filtration 0.01 µm		Fine filter Grade of filtration 1 µm	
			Part No.	Type	Part No.	Type
Standard						
MS9	Manual rotary	G¾	**553070**	**MS9-LFM-¾-AUM**	**553074**	**MS9-LFM-¾-BUM**
		G1	**553000**	**MS9-LFM-1-AUM**	**553004**	**MS9-LFM-1-BUM**
		–	**564047**	**MS9-LFM-G-AUM**	**564039**	**MS9-LFM-G-BUM**
	Fully automatic	G¾	**553072**	**MS9-LFM-¾-AUV**	**553076**	**MS9-LFM-¾-BUV**
		G1	**553002**	**MS9-LFM-1-AUV**	**553006**	**MS9-LFM-1-BUV**
		–	**564049**	**MS9-LFM-G-AUV**	**564041**	**MS9-LFM-G-BUV**
High flow rate						
MS9	Manual rotary	G¾	**552964**	**MS9-LFM-¾-AUM-HF**	**552968**	**MS9-LFM-¾-BUM-HF**
		G1	**553038**	**MS9-LFM-1-AUM-HF**	**553042**	**MS9-LFM-1-BUM-HF**
		–	**564051**	**MS9-LFM-G-AUM-HF**	**564043**	**MS9-LFM-G-BUM-HF**
	Fully automatic	G¾	**552966**	**MS9-LFM-¾-AUV-HF**	**552970**	**MS9-LFM-¾-BUV-HF**
		G1	**553040**	**MS9-LFM-1-AUV-HF**	**553044**	**MS9-LFM-1-BUV-HF**
		–	**564053**	**MS9-LFM-G-AUV-HF**	**564045**	**MS9-LFM-G-BUV-HF**

Ordering data						
With differential pressure indicator						
Size	Condensate drain	Connection	Micro filter Grade of filtration 0.01 µm		Fine filter Grade of filtration 1 µm	
			Part No.	Type	Part No.	Type
Standard						
MS9	Manual rotary	G¾	**553078**	**MS9-LFM-¾-AUM-DA**	**553082**	**MS9-LFM-¾-BUM-DA**
		G1	**553008**	**MS9-LFM-1-AUM-DA**	**553012**	**MS9-LFM-1-BUM-DA**
		–	**564048**	**MS9-LFM-G-AUM-DA**	**564040**	**MS9-LFM-G-BUM-DA**
	Fully automatic	G¾	**553080**	**MS9-LFM-¾-AUV-DA**	**553084**	**MS9-LFM-¾-BUV-DA**
		G1	**553010**	**MS9-LFM-1-AUV-DA**	**553014**	**MS9-LFM-1-BUV-DA**
		–	**564050**	**MS9-LFM-G-AUV-DA**	**564042**	**MS9-LFM-G-BUV-DA**
High flow rate						
MS9	Manual rotary	G¾	**552972**	**MS9-LFM-¾-AUM-HF-DA**	**552976**	**MS9-LFM-¾-BUM-HF-DA**
		G1	**553046**	**MS9-LFM-1-AUM-HF-DA**	**553050**	**MS9-LFM-1-BUM-HF-DA**
		–	**564052**	**MS9-LFM-G-AUM-HF-DA**	**564044**	**MS9-LFM-G-BUM-HF-DA**
	Fully automatic	G¾	**552974**	**MS9-LFM-¾-AUV-HF-DA**	**552978**	**MS9-LFM-¾-BUV-HF-DA**
		G1	**553048**	**MS9-LFM-1-AUV-HF-DA**	**553052**	**MS9-LFM-1-BUV-HF-DA**
		–	**564054**	**MS9-LFM-G-AUV-HF-DA**	**564046**	**MS9-LFM-G-BUV-HF-DA**

Fine and micro filters MS9-LFM, MS series

Ordering data – Modular products

FESTO

M Mandatory data

Module No.	Series	Size		Function		Connection size		Grade of filtration		Bowl
552940	MS	9		LFM		¾, 1, AGD, AGE, AGF, AGG, AGH, G		B, A		U
Order example										
552940	**MS**	**9**	–	**LFM**	–	**AGD**	–	**B**	–	**U**

Ordering table

Grid dimension [mm]		90	Condi-tions	Code		Enter code
M	Module No.	**552940**				
	Series	Standard service unit		**MS**		MS
	Size	9		**9**		9
	Function	Fine and micro filter		**-LFM**		-LFM
	Connection size	Thread G¾	1	**-¾**		
		Thread G1	1	**-1**		
		Connecting plate G½		**-AGD**		
		Connecting plate G¾		**-AGE**		
		Connecting plate G1		**-AGF**		
		Connecting plate G1¼		**-AGG**		
		Connecting plate G1½		**-AGH**		
		Module without connecting thread, without connecting plate	1	**-G**		
	Grade of filtration µm	1		**-B**		
		0.01		**-A**		
↓	Bowl	Metal bowl		**-U**		-U

1 **¾, 1, G, E2, E3, E4, WPM**
Not with EU certification EX4

Transfer order code

552940	**MS**	**9**	–	**LFM**	–		–		–	**U**

Fine and micro filters MS9-LFM, MS series

Ordering data – Modular products

FESTO

➔ M Mandatory data | O Options

	Condensate drain		Flow rate		Filter contamination sensor		Type of mounting		EU certification		UL certification		Alternative flow direction
	M, H, V, E2, E3, E4		HF		DA		WP, WPM, WPB		EX4		UL1		Z
–	M	–	HF	–	DA	–	WP	–		–		–	Z

Ordering table

	Grid dimension [mm]	90	Conditions	Code		Enter code
↓ M	Condensate drain	Manual		-M		
		Semi-automatic (P1 max. 12 bar)		-H		
		Fully automatic (P1 max. 12 bar)		-V		
		External fully automatic condensate drain, electrical, 110 V AC, terminal strip	1	-E2		
		External fully automatic condensate drain, electrical, 230 V AC, terminal strip	1	-E3		
		External fully automatic condensate drain, electrical, 24 V DC, terminal strip	1	-E4		
O	Flow rate	High flow rate		-HF		
	Filter contamination sensor	Differential pressure indicator, visual		-DA		
	Type of mounting	Mounting bracket	2	-WP		
		Mounting bracket	1 2	-WPM		
		Wall mounting bracket for large wall gap	2	-WPB		
	EU certification	II 2GD to EU Directive 94/9/EG		-EX4		
	UL certification	cULus, ordinary location for Canada and USA		-UL1		
	Alternative flow direction	Flow direction from right to left		-Z		

1 **¾, 1, G, E2, E3, E4, WPM**
Not with EU certification EX4

2 **WP, WPM, WPB** Not with module G

Transfer order code

–		–		–		–		–		–		–	

New
Variant EX4, UL1

Activated carbon filters MS9-LFX, MS series

Peripherals overview

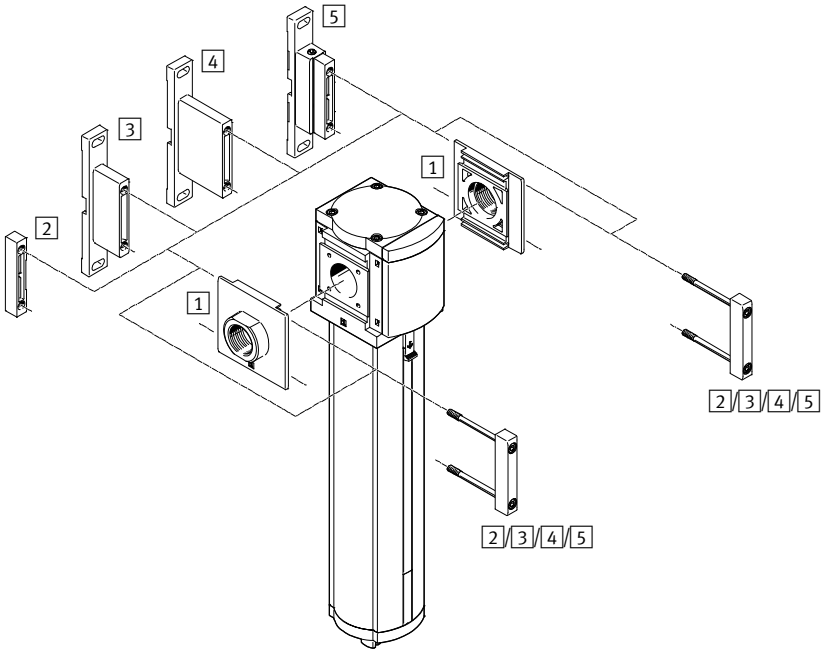

Note

Other accessories:
- Module connector for combination with size MS6, MS9 or MS12
  ➔ Internet: rmv, armv

Mounting attachments and accessories		Individual device			Combination	➔ Page/ Internet
		With female thread ¾ or 1	With connecting plate AG...		Module without connecting thread, without connecting plate G	
			Without EU certification EX4	With EU certification EX4		
1	Connecting plate-SET MS9-AG...	–	■	■	■	ms9-ag
2	Module connector MS9-MV	–	–	–	■	ms9-mv
3	Mounting bracket MS9-WP	■	■	■	■	ms9-wp
4	Mounting bracket MS9-WPB	■	■	■	■	ms9-wp
5	Mounting bracket MS9-WPM	■	■	–	■	ms9-wp

Activated carbon filters MS9-LFX, MS series

Type codes

MS	9	–	LFX	–	¾	–	U

Series	
MS	Standard service unit

Size	
9	Grid dimension 90 mm

Service function	
LFX	Activated carbon filter

Pneumatic connection	
¾	Thread G¾
1	Thread G1
G	Module without connecting thread, without connecting plate

Bowl guard	
U	Integrated as metal bowl

Further variants can be ordered using the modular system ➔ 64

- Connecting plates
- Type of mounting
- EU certification
- UL certification
- Alternative flow direction

New
Variant EX4, UL1

Activated carbon filters MS9-LFX, MS series

Technical data

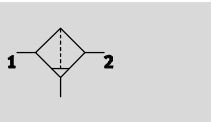

Flow rate
max. 6,500 l/min

Temperature range
–10 … +60 °C

Operating pressure
0 … 20 bar

- Removal of liquid and gaseous oil particles from compressed air using activated carbon
- Eliminates odours and vapours
- Prefiltration with micro filter MS9-LFM-A, grade of filtration 0.01 µm, recommended
- New filter cartridges ➔ 88
- Optional device variant EX4 for use in potentially explosive areas in zones 1, 2, 21 and 22

General technical data				
Size	MS9			
Pneumatic connection 1, 2	G¾	G1	G½ … G1½ (with connecting plate AG…)	– (without connecting thread G)
Constructional design	Activated carbon filter			
Type of mounting	Via accessories			
	In-line installation			
Installation position	Vertical ±5°			
Air purity class at the output[1]	Compressed air in accordance with ISO 8573-1:2010 [1:4:1]			
Bowl guard	Integrated as metal bowl			
Residual oil content [mg/m³]	≤0.003			

1) It is recommended to replace filter cartridges after 1,000 operating hours (applies to an ambient temperature of 21 °C). The service life of a filter cartridge is reduced at higher temperatures.
Note: This product conforms to ISO 1179-1 and to ISO 228-1

Standard flow rate q_n[1] [l/min]	
Max. standard flow rate for air purity class $q_{n\ max}$	6,500

1) Measured at p1 = 6 bar

Operating and environmental conditions	
Operating pressure [bar]	0 … 20
Operating medium	Compressed air in accordance with ISO 8573-1:2010 [1:4:2]
Ambient temperature [°C]	–10 … +60
Temperature of medium [°C]	+5 … +30
Storage temperature [°C]	–10 … +60
Corrosion resistance class CRC[1]	2
UL certification	cULus recognized (OL)

1) Corrosion resistance class CRC 2 to Festo standard FN 940070
Moderate corrosion stress. Indoor applications in which condensation may occur. External visible parts with primarily decorative requirements for the surface and which are in direct contact with the ambient atmosphere typical for industrial applications.

Activated carbon filters MS9-LFX, MS series

Technical data

ATEX	
EU certification	EX4
ATEX category gas	II 2G
Ex-ignition protection type gas	c T6 X
ATEX category dust	II 2D
EX-ignition protection type dust	c T60 °C X
ATEX ambient temperature	−10 °C ≤ Ta ≤ +60 °C
CE mark (see declaration of conformity)	To EU Explosion Protection Directive (ATEX)

Weights [g]	
Activated carbon filter	2,000

Materials

Sectional view

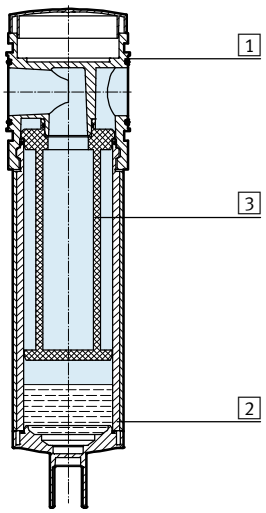

Activated carbon filter		
1	Housing	Die-cast aluminium
2	Bowl	Wrought aluminium alloy
	Inspection window	PA
3	Filter	Activated carbon
–	Cover	PA reinforced
–	Connecting plate, module connector, mounting bracket	Die-cast aluminium
–	Seals	NBR
Note on materials		Free of copper and PTFE

Standard flow rate qn as a function of the differential pressure p1-2

MS9-LFX-AGD, Pneumatic connection G½

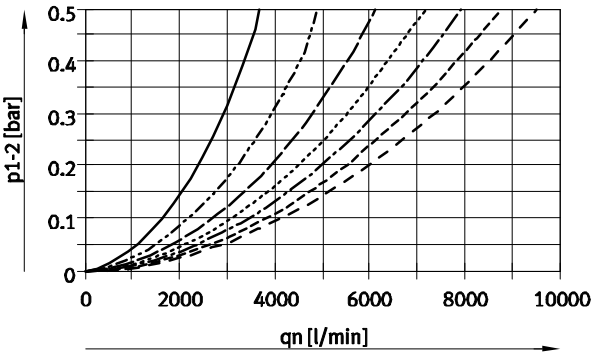

MS9-LFX-¾/AGE, Pneumatic connection G¾

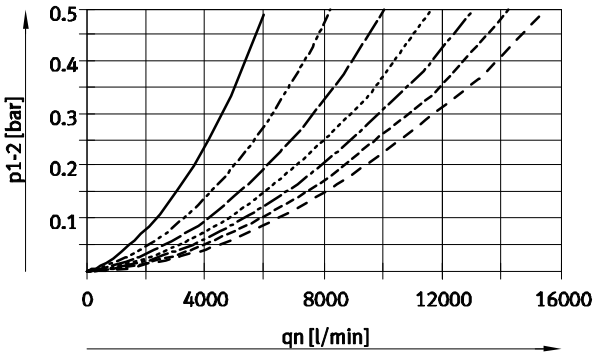

- 2 bar
- 4 bar
- 6 bar
- 8 bar
- 10 bar
- 12 bar
- 14 bar

Activated carbon filters MS9-LFX, MS series

Technical data

FESTO

Standard flow rate qn as a function of the differential pressure p1-2

MS9-LFX-1/AGF, Pneumatic connection G1

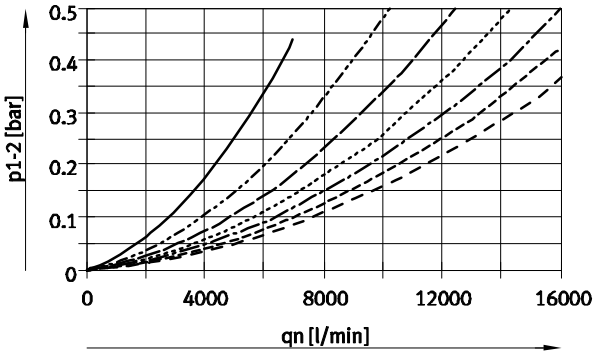

MS9-LFX-AGH, Pneumatic connection G1½

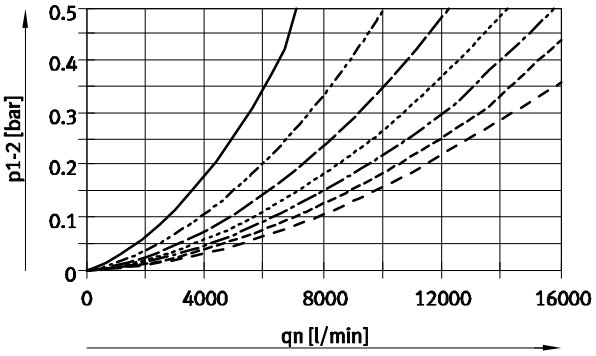

- 2 bar
- 4 bar
- 6 bar
- 8 bar
- 10 bar
- 12 bar
- 14 bar

Dimensions – Basic version

Download CAD data ➔ **www.festo.com**

without connecting thread G

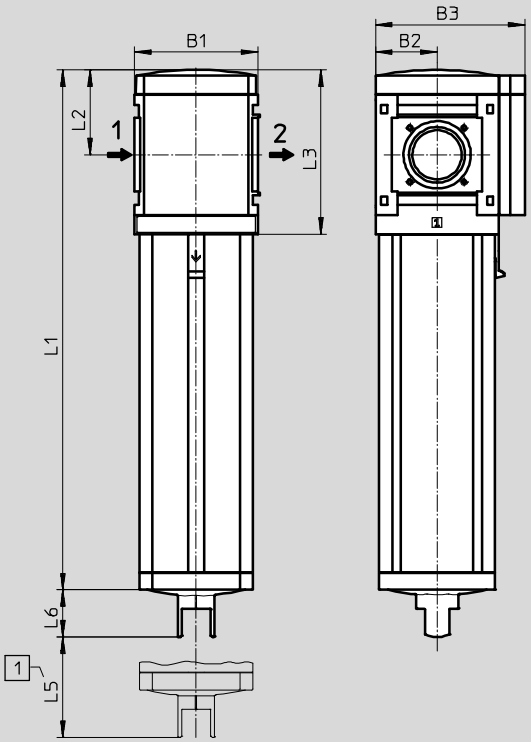

1 Installation dimensions

➔ Flow direction

Type	B1	B2	B3	L1	L2	L3	L5	L6
MS9-LFX-G	90	45	109	380.5	62	120	50	34.5

Activated carbon filters MS9-LFX, MS series

Technical data

FESTO

Dimensions – Connecting thread/connecting plate Download CAD data ➔ **www.festo.com**

with connecting thread ¾ or 1

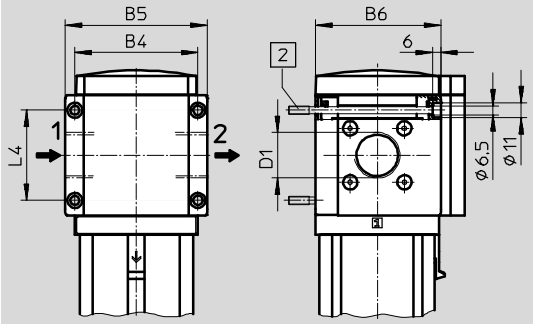

with connecting plate AG...

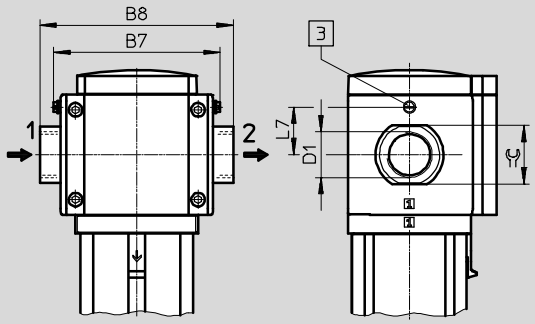

2 Mounting screw M6xmin.90 to DIN 912 (not included in scope of delivery) for wall mounting without mounting bracket

3 Earthing screw M4x8 (only with MS9-...-EX4)

➔ Flow direction

Type	B4	B5	B6	B7		B8	D1	L4	L7	⌀
					EX4				EX4	
MS9-LFX-¾	90	104	91.5	–	–	–	G¾	66	–	–
MS9-LFX-1							G1			
MS9-LFX-AGD	–	–	–	112	122	132	G½	–	35	30
MS9-LFX-AGE						132	G¾			36
MS9-LFX-AGF						142	G1			41
MS9-LFX-AGG						162	G1¼			50
MS9-LFX-AGH						176	G1½			55

Note: This product conforms to ISO 1179-1 and to ISO 228-1

Ordering data

Size	Connection	Part No.	Type
MS9	G¾	**552996**	**MS9-LFX-¾-U**
	G1	**553032**	**MS9-LFX-1-U**
	–	**564038**	**MS9-LFX-G-U**

New
Variant EX4, UL1

Activated carbon filters MS9-LFX, MS series

Ordering data – Modular products

FESTO

M Mandatory data								O Options			
Module No.	Series	Size	Function	Connection size	Bowl	Type of mounting	EU certification	UL certification	Alternative flow direction
552942	MS	9	LFX	¾, 1, AGD, AGE, AGF, AGG, AGH, G	U	WP, WPM, WPB	EX4	UL1	Z
Order example									
552942	MS	9	– LFX	– AGD	– U	– WP	–	–	– Z

Ordering table

	Grid dimension [mm]	90	Conditions	Code		Enter code
M	Module No.	552942				
	Series	Standard service unit		MS		MS
	Size	9		9		9
	Function	Activated carbon filter		-LFX		-LFX
	Connection size	Thread G¾	1	-¾		
		Thread G1	1	-1		
		Connecting plate G½		-AGD		
		Connecting plate G¾		-AGE		
		Connecting plate G1		-AGF		
		Connecting plate G1¼		-AGG		
		Connecting plate G1½		-AGH		
		Module without connecting thread, without connecting plate	1	-G		
	Bowl	Metal bowl		-U		-U
O	Type of mounting	Mounting bracket	2	-WP		
		Mounting bracket	1 2	-WPM		
		Wall mounting bracket for large wall gap	2	-WPB		
	EU certification	II 2GD to EU Directive 94/9/EG		-EX4		
	UL certification	cULus, ordinary location for Canada and USA		-UL1		
	Alternative flow direction	Flow direction from right to left		-Z		

1 **¾, 1, G, WPM** Not with EU certification EX4
2 **WP, WPM, WPB** Not with module G

Transfer order code

552942	MS	9	–	LFX	–		–	U	–		–		–		–		–	

Filters MS12-LF, MS series

Peripherals overview

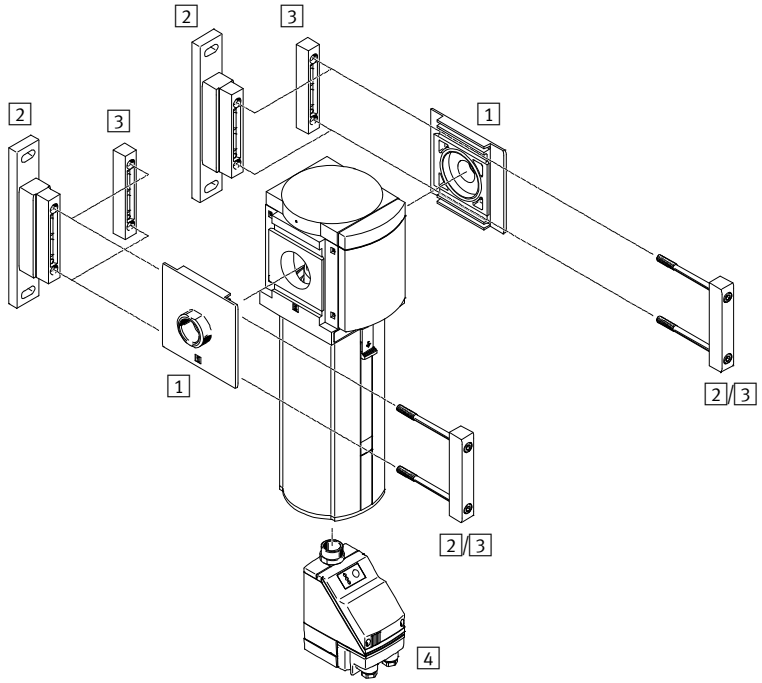

- Note

Additional accessories:

– Module connector for combination with size MS9 ➔ Internet: armv

Mounting attachments and accessories		
		➔ Page/Internet
1	Connecting plate-SET MS12-AG...	ms12-ag
2	Mounting bracket MS12-WP	ms12-wp
3	Module connector MS12-MV	ms12-mv
4	Condensate drain, fully automatic, electrically actuated E2/E3/E4	71

Filters MS12-LF, MS series

Type codes

MS	12	–	LF	–	G	–	C	U	V

Series	
MS	Standard service unit

Size	
12	Grid dimension 124 mm

Service function	
LF	Filter

Connection size	
G	Module without connecting thread, without connecting plate Connecting plates ➔ Accessories

Grade of filtration	
C	5 µm
E	40 µm

Bowl guard	
U	Integrated as metal bowl

Condensate drain	
V	Fully automatic

Further variants can be ordered using the modular system ➔ 71

- Connecting plates
- Condensate drain
- Type of mounting
- Alternative flow direction

Filters MS12-LF, MS series

Technical data

Function
Condensate drain
manual rotary

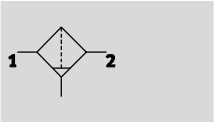

fully automatic

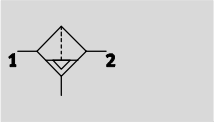

Flow rate
11,500 … 16,000 l/min

Temperature range
–10 … +60 °C

Operating pressure
0.8 … 20 bar

The sintered filter with centrifugal separation removes contamination, rust and condensate from the compressed air. The filter cartridges are replaceable.

- Good particle and condensate separation
- High flow rate with minimal pressure drop
- Available with manual, fully automatic or fully automatic, electrically actuated condensate drain
- Choice of filter cartridges: 5 µm or 40 µm
- New filter cartridges ➔ 89

General technical data				
Pneumatic connection 1, 2[1]	G1	G1¼	G1½	G2
Design	Sintered filter with centrifugal separation			
Type of mounting	Via accessories			
	In-line installation			
Assembly position	Vertical ±5°			
Grade of filtration [µm]	5			
	40			
Air purity class at the output	Compressed air in accordance with ISO 8573-1:2010 [6:8:4] (Grade of filtration 5 µm)			
	Compressed air in accordance with ISO 8573-1:2010 [7:8:4] (Grade of filtration 40 µm)			
Bowl guard	Integrated as metal bowl			
Condensate drain	Manual rotary			
	Fully automatic			
	Fully automatic, electrical actuated			
Max. condensate volume [cm^3]	400			

1) Dependent on connecting plate selected, must be ordered separately as an accessory ➔ Internet: ms12-ag
Note: This product conforms to ISO 1179-1 and to ISO 228-1

Standard nominal flow rate qnN[1] [l/min]					
Pneumatic connection		G1	G1¼	G1½	G2
Grade of filtration	5 µm	11,500	12,500	13,500	14,000
	40 µm	12,500	13,000	14,000	16,000

1) Dependent on connecting plate selected, must be ordered separately as an accessory ➔ Internet: ms12-ag
Measured at p1 = 6 bar and Δp = 0.5 bar

Operating and environmental conditions				
Condensate drain		Manual rotary M	Fully automatic V	Fully automatic, electrical actuated E2/E3/E4
Operating pressure	[bar]	0.8 … 20	2 … 12	0.8 … 16
Operating medium		Compressed air in accordance with ISO 8573-1:2010 [–:9:–]	Compressed air in accordance with ISO 8573-1:2010 [7:9:–]	Compressed air in accordance with ISO 8573-1:2010 [–:9:–]
		Inert gases		
Ambient temperature	[°C]	–10 … +60	+5 … +60	+1 … +60
Temperature of medium	[°C]	–10 … +60	+5 … +60	+1 … +60
Storage temperature	[°C]	–10 … +60	–10 … +60	+1 … +60
Corrosion resistance	CRC[1)]	2		

1) Corrosion resistance class CRC 2 to Festo standard FN 940070
Moderate corrosion stress. Indoor applications in which condensation may occur. External visible parts with primarily decorative requirements for the surface and which are in direct contact with the ambient atmosphere typical for industrial applications.

Weights [g]	
Filter with metal bowl U	6,500
Filter with metal bowl U and fully automatic, electrically actuated condensate drain E2/E3/E4	7,200

Materials

Sectional view

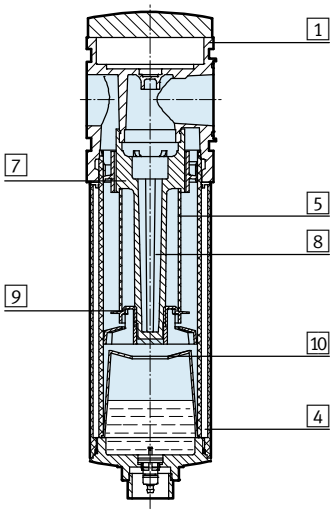

Filter		
1	Body	Die-cast aluminium
4	Metal bowl	Wrought aluminium alloy
5	Filter element	Sintered bronze
7	Spin disc	POM
8	Filter holder	POM
9	Separating plate	POM
10	Stabilising disc	POM
–	Seals	NBR

Standard flow rate qn as a function of the differential pressure Δp1-2

Grade of filtration 5 µm

p1 = 6 bar

With connecting plate MS12-AGF
Pneumatic connection G1

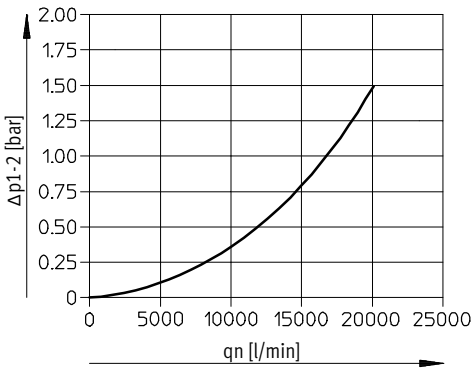

With connecting plate MS12-AGI
Pneumatic connection G2

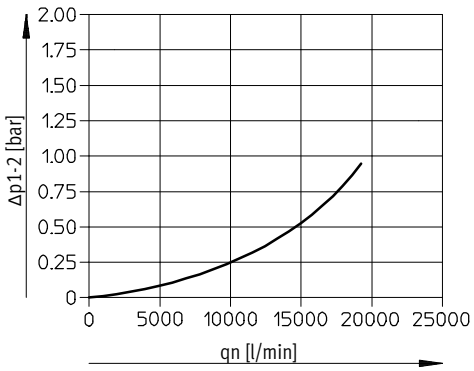

Standard flow rate qn as a function of the differential pressure Δp1-2

Grade of filtration 40 µm

p1 = 6 bar

With connecting plate MS12-AGF
Pneumatic connection G1

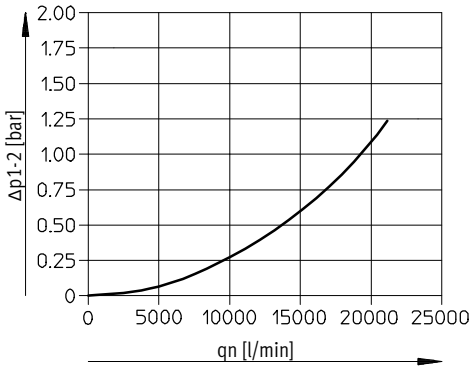

With connecting plate MS12-AGI
Pneumatic connection G2

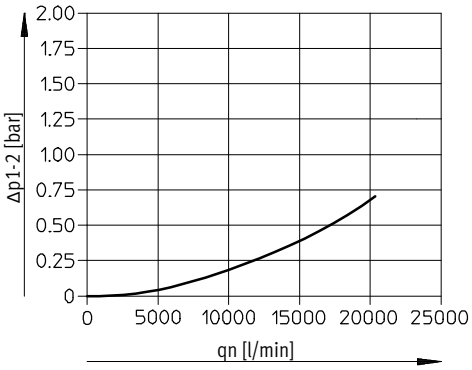

Dimensions – Basic version

Download CAD data ➔ **www.festo.com**

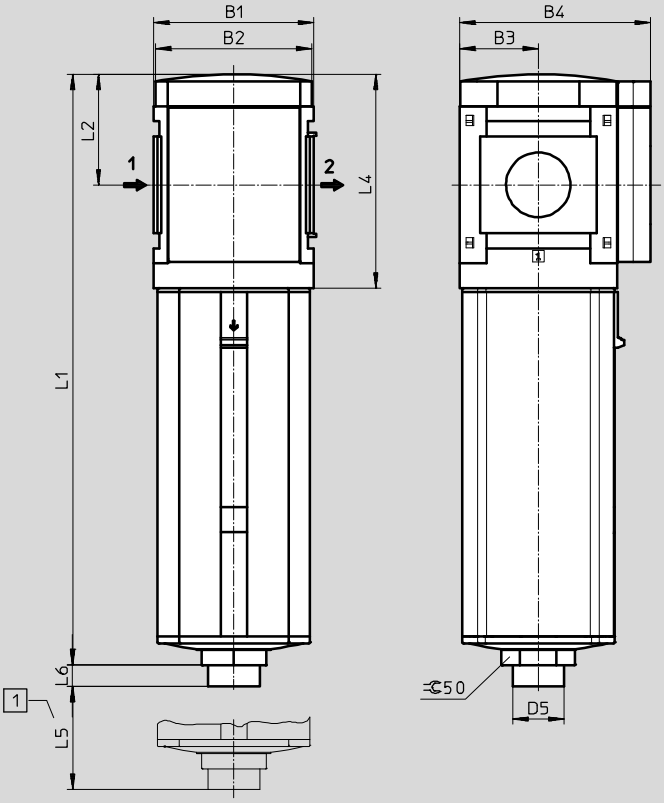

Type	B1	B2	B3	B4	D5 ∅	L1	L2	L4	L5	L6
MS12-LF	124	122	61	148	40	458	86	166	250	16

Dimensions – Condensate drain

Download CAD data ➔ **www.festo.com**

Manual rotary M

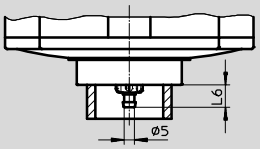

Barbed fitting for plastic tubing PCN-4

Type	L6
MS12-LF-...-M	11

Fully automatic V

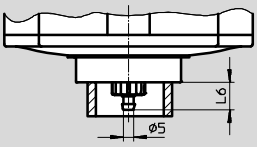

Barbed fitting for plastic tubing PCN-4

Type	L6
MS12-LF-...-V	13

Fully automatic, electrically actuated E2/E3/E4

Technical data ➔ Internet: pwea

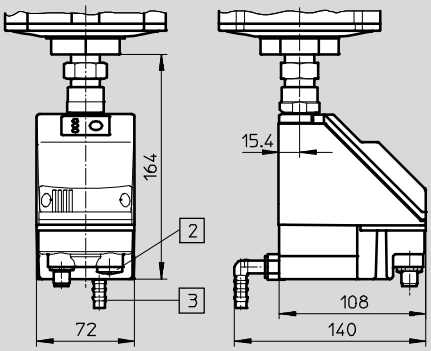

Condensate drain PWEA:

2 Electrical connection: Screw terminal PG9

3 Connection 360° rotatable for plastic tubing PUN-H-12x2

Ordering data

Metal bowl

Size	Condensate drain	Connection	Grade of filtration 5 µm			Grade of filtration 40 µm	
			Part No.	Type		Part No.	Type
MS12	fully automatic	G1 ... G2[1]	**537152**	**MS12-LF-G-CUV**		**537151**	**MS12-LF-G-EUV**

1) Connecting plate must be ordered separately as an accessory ➔ Internet: ms12-ag

Note: This product conforms to ISO 1179-1 and to ISO 228-1

FESTO

M Mandatory data								O Options	
Module No.	Series	Size	Function	Connection size	Grade of filtration	Bowl	Condensate drain	Type of mounting	Alternative flow direction
535023	MS	12	LF	AGF, AGG, AGH, AGI, G	E, C	U	M, V, E2, E3, E4	WP	Z
Order example									
535023	**MS**	**12**	– **LF**	– **G**	– **E**	– **U**	– **V**	–	–

Ordering table

Grid dimension	[mm]	124	Conditions	Code	Enter code
M	Module No.	**535023**			
	Series	Standard		**MS**	MS
	Size	12		**12**	12
	Function	Filter		**-LF**	-LF
	Connection size	Connecting plate G1		**-AGF**	
		Connecting plate G1¼		**-AGG**	
		Connecting plate G1½		**-AGH**	
		Connecting plate G2		**-AGI**	
		Module without connecting thread, without connecting plate		**-G**	
	Grade of filtration	40 µm		**-E**	
		5 µm		**-C**	
	Bowl	Metal bowl		**-U**	-U
	Condensate drain	Manual		**-M**	
		Fully automatic (P1 max. 12 bar)		**-V**	
		External fully automatic condensate drain, electrical, 110 V AC, terminals		**-E2**	
		External fully automatic condensate drain, electrical, 230 V AC, terminals		**-E3**	
		External fully automatic condensate drain, electrical, 24 V DC, terminals		**-E4**	
O	Type of mounting	Mounting bracket	1	**-WP**	
	Alternative flow direction	Flow direction from right to left		**-Z**	

1 **WP** Only with connecting plate AGF, AGG, AGH or AGI.

Transfer order code

535023	**MS**	**12**	– **LF**	–	–	– **U**	–	–	–

Fine and micro filters MS12-LFM, MS series

Peripherals overview

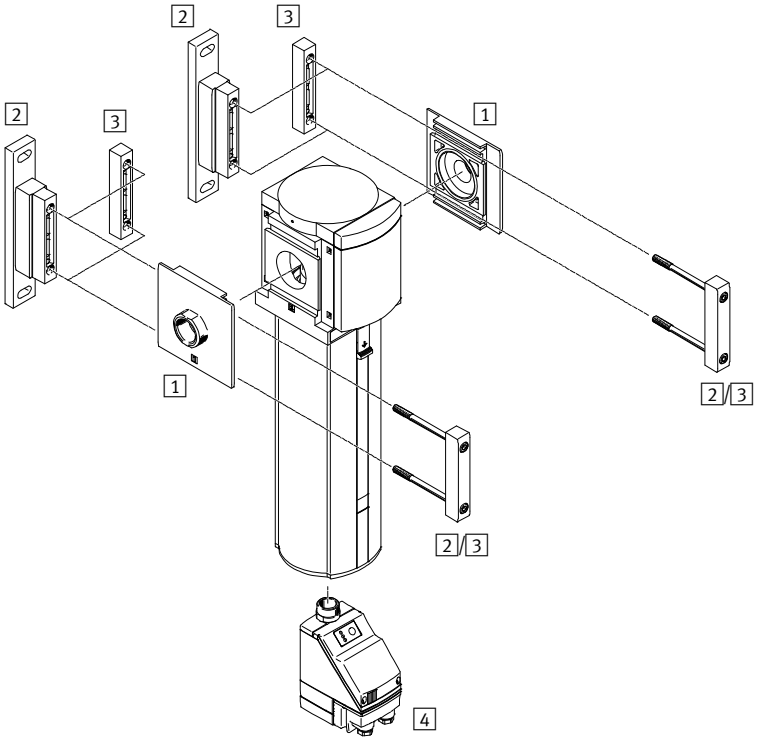

Note

Additional accessories:

– Module connector for combination with size MS9 ➔ Internet: armv

Mounting attachments and accessories		
		➔ Page/Internet
1	Connecting plate-SET MS12-AG...	ms12-ag
2	Mounting bracket MS12-WP	ms12-wp
3	Module connector MS12-MV	ms12-mv
4	Condensate drain, fully automatic, electrically actuated E2/E3/E4	80

Fine and micro filters MS12-LFM, MS series

Type codes

MS	12	–	LFM	–	G	–	B	U	V

Series	
MS	Standard service unit

Size	
12	Grid dimension 124 mm

Service function	
LFM	Fine and micro filter

Connection size	
G	Module without connecting thread, without connecting plate Connecting plates ➔ Accessories

Grade of filtration	
A	0.01 µm
B	1 µm

Bowl guard	
U	Integrated as metal bowl

Condensate drain	
V	Fully automatic

Further variants can be ordered using the modular system ➔ 80

- Connecting plates
- Condensate drain
- Filter change sensor
- Type of mounting
- Alternative flow direction

Fine and micro filters MS12-LFM, MS series

Technical data

Function
Condensate drain
manual rotary
without differential pressure indicator

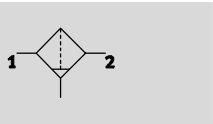

with differential pressure indicator

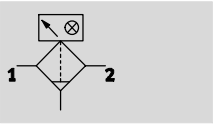

Condensate drain
fully automatic
without differential pressure indicator

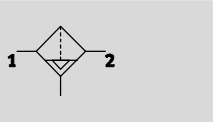

with differential pressure indicator

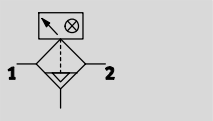

Flow rate
500 … 50,000 l/min

Temperature range
–10 … +60 °C

Operating pressure
0.8 … 20 bar

- High-performance filter for exceptionally clean compressed air
- Air quality to ISO 8573-1:2010
- Available with manual, fully automatic or fully automatic, electrically actuated condensate drain
- Available with differential pressure indicator for optical indication of filter contamination
- Choice of filter cartridges: 0.01 µm or 1 µm
- New filter cartridges ➔ 89

General technical data				
Pneumatic connection 1, 2[1]	G1	G1¼	G1½	G2
Design	Fibre filter			
Type of mounting	Via accessories			
	In-line installation			
Assembly position	Vertical ±5°			
Grade of filtration [µm]	0.01 (micro filter MS12-LFM-A)			
	1 (fine filter MS12-LFM-B)			
Air purity class at the output	Compressed air in accordance with ISO 8573-1:2010 [1:7:2] (Grade of filtration 0.01µm, micro filter MS12-LFM-A)			
	Compressed air in accordance with ISO 8573-1:2010 [2:7:3] (Grade of filtration 1µm, fine filter MS12-LFM-B)			
Filter efficiency [%]	99.9999 (Grade of filtration 0.01µm, micro filter MS12-LFM-A)			
	99.99 (Grade of filtration 1µm, fine filter MS12-LFM-B)			
Bowl guard	Integrated as metal bowl			
Condensate drain	Manual rotary			
	Fully automatic			
	Fully automatic, electrical actuated			
Max. condensate volume [cm^3]	400			

1) Dependent on connecting plate selected, must be ordered separately as an accessory ➔ Internet: ms12-ag
Note: This product conforms to ISO 1179-1 and to ISO 228-1

Fine and micro filters MS12-LFM, MS series

Technical data

Standard flow rate q_n [l/min]				
Operating pressure	4 bar	6 bar	10 bar	14 bar
Micro filter MS12-LFM-A				
Max. standard flow rate for air purity class $q_{n\ max}$	16,670	23,300	36,670	50,000
Min. standard flow rate for air purity class $q_{n\ min}$	500	700	1,100	1,500
Fine filter MS12-LFM-B				
Max. standard flow rate for air purity class $q_{n\ max}$	16,670	23,300	36,670	50,000
Min. standard flow rate for air purity class $q_{n\ min}$	625	950	1,390	1,675

Operating and environmental conditions				
Condensate drain		Manual rotary M	Fully automatic V	Fully automatic, electrical actuated E2/E3/E4
Operating pressure	[bar]	0.8 … 20	2 … 12	0.8 … 16
Operating medium		Compressed air in accordance with ISO 8573-1:2010 [6:8:4][1]		
		Inert gases		
Ambient temperature	[°C]	−10 … +60	+5 … +60	+1 … +60
Temperature of medium	[°C]	−10 … +60	+5 … +60	+1 … +60
Storage temperature	[°C]	−10 … +60	−10 … +60	+1 … +60
Corrosion resistance	CRC[2]	2		

1) It is recommended to prefilter the compressed air for the micro filter MS-LFM-A using a fine filter MS-LFM-B (grade of filtration 1 µm).
2) Corrosion resistance class CRC 2 to Festo standard FN 940070
Moderate corrosion stress. Indoor applications in which condensation may occur. External visible parts with primarily decorative requirements for the surface and which are in direct contact with the ambient atmosphere typical for industrial applications.

Weights [g]	
Fine and micro filter with metal bowl U	7,000
Fine and micro filter with metal bowl U and fully automatic, electrically actuated condensate drain E2/E3/E4	7,700

Materials

Sectional view

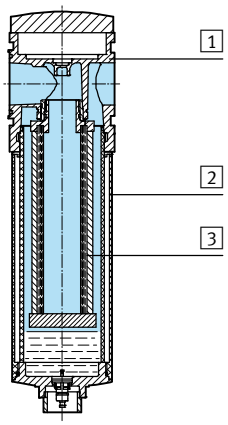

Fine and micro filter		
1	Body	Die-cast aluminium
2	Metal bowl	Wrought aluminium alloy
	Viewing window	PC
3	Filter element	Borosilicate mesh
–	Seals	NBR
Note on materials		RoHS-compliant (not with variant E2, E3 or E4)
		Free of copper and PTFE

Standard flow rate qn as a function of the differential pressure p1-2

Grade of filtration 0.01 µm
With connecting plate MS12-AGF, Pneumatic connection G1

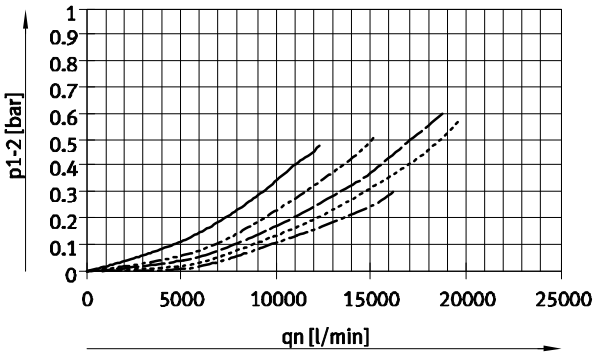

Grade of filtration 0.01 µm
With connecting plate MS12-AGG, Pneumatic connection G1¼

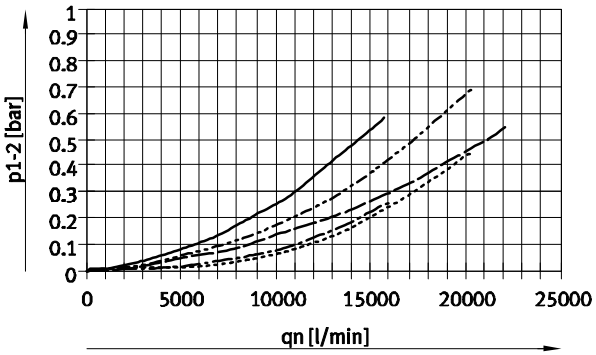

Grade of filtration 0.01 µm
With connecting plate MS12-AGH, Pneumatic connection G1½

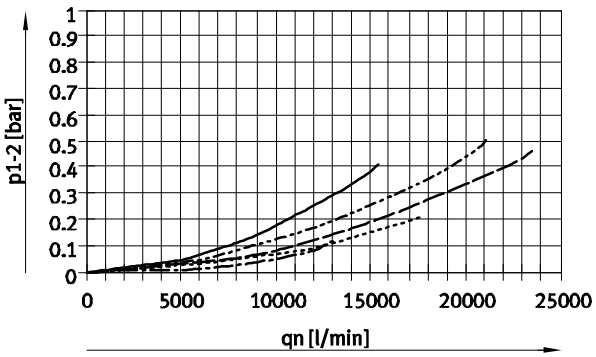

Grade of filtration 0.01 µm
With connecting plate MS12-AGI, Pneumatic connection G2

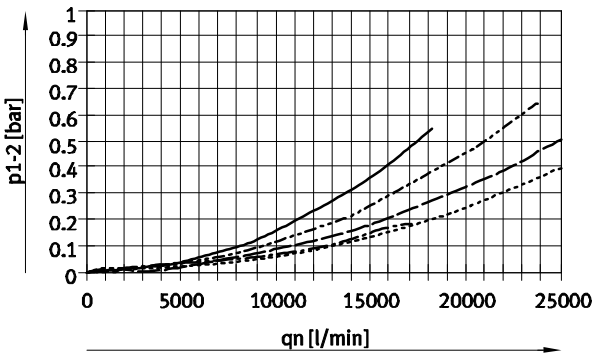

p1: 4 bar
p1: 6 bar
p1: 8 bar
p1: 10 bar
p1: 12 bar

Standard flow rate qn as a function of the differential pressure p1-2

Grade of filtration 1 µm
With connecting plate MS12-AGF, Pneumatic connection G1

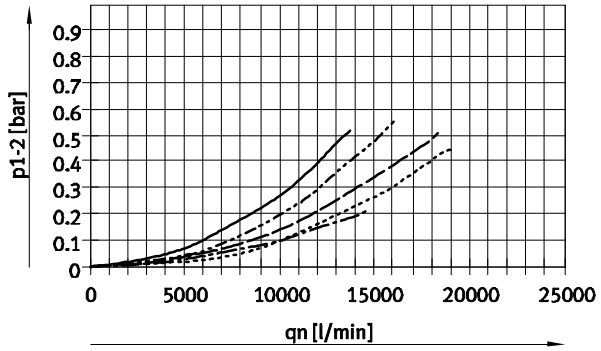

Grade of filtration 1 µm
With connecting plate MS12-AGG, Pneumatic connection G1¼

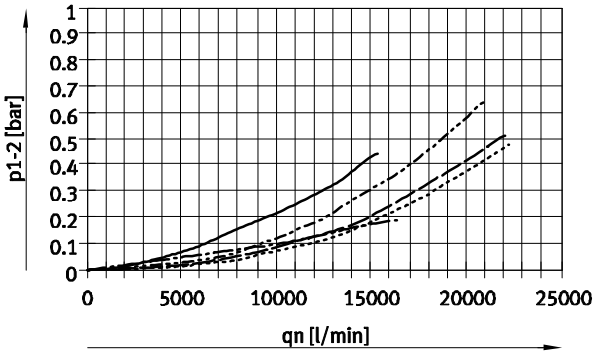

Grade of filtration 1 µm
With connecting plate MS12-AGH, Pneumatic connection G1½

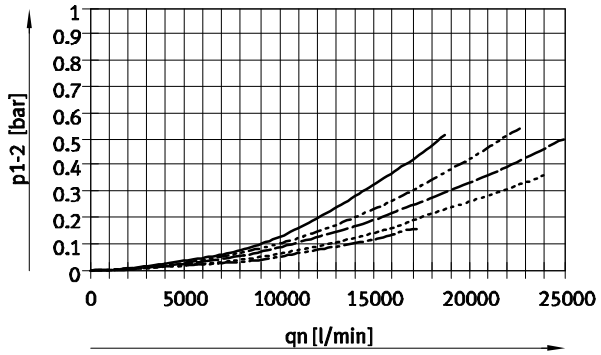

Grade of filtration 1 µm
With connecting plate MS12-AGI, Pneumatic connection G2

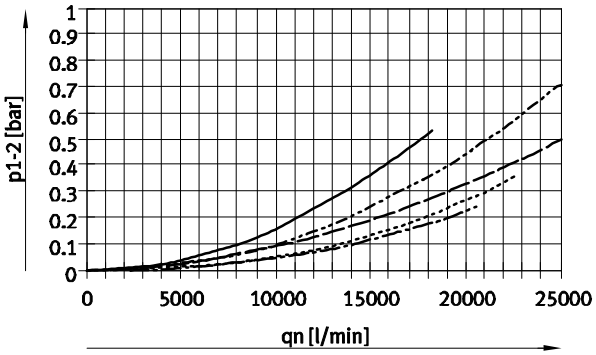

p1: 4 bar
p1: 6 bar
p1: 8 bar
p1: 10 bar
p1: 12 bar

Dimensions – Basic version Download CAD data ➔ **www.festo.com**

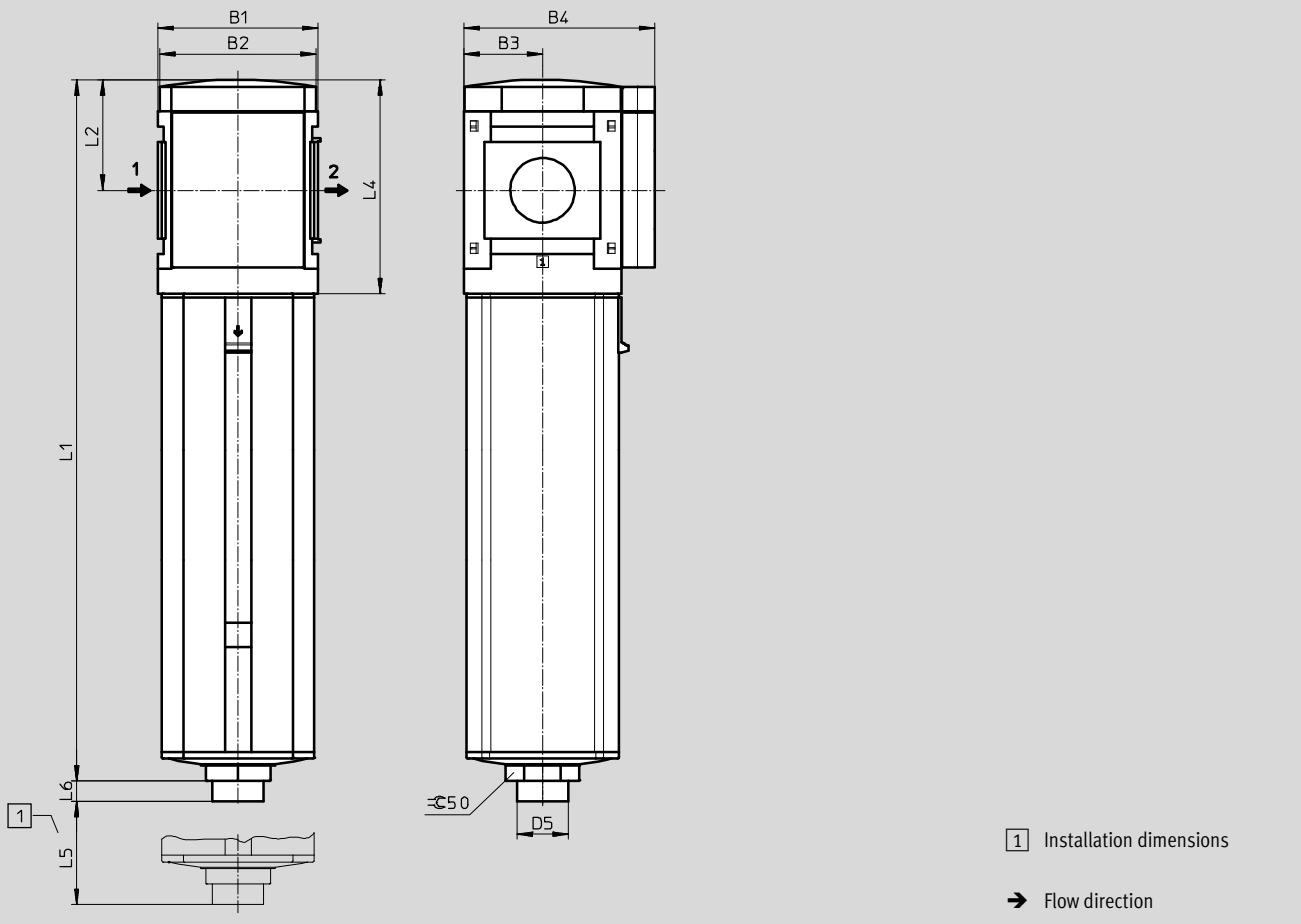

Type	B1	B2	B3	B4	D5 ∅	L1	L2	L4	L5	L6
MS12-LFM	124	122	61	148	40	543	86	166	350	16

Dimensions – Differential pressure indicator Download CAD data ➔ **www.festo.com**

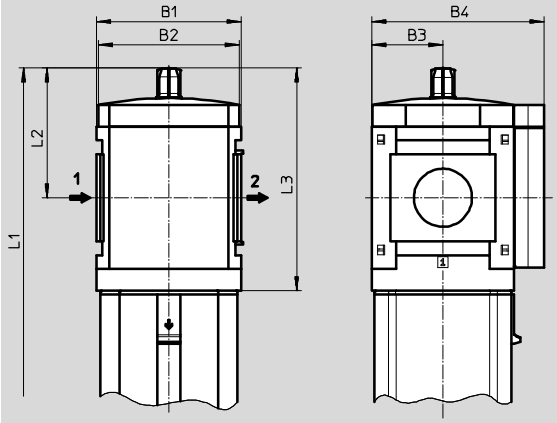

➔ Flow direction

Type	B1	B2	B3	B4	L1	L2	L3
MS12-LFM-...-DA	124	122	61	148	569	112	192

Dimensions – Condensate drain Download CAD data ➔ **www.festo.com**

Manual rotary M

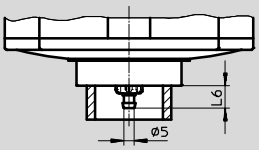

Barbed fitting for plastic tubing PCN-4

Type	L6
MS12-LFM-...-M	11

Fully automatic V

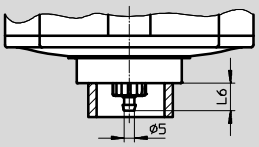

Barbed fitting for plastic tubing PCN-4

Type	L6
MS12-LFM-...-V	13

Fully automatic, electrically actuated E2/E3/E4 Technical data ➔ Internet: pwea

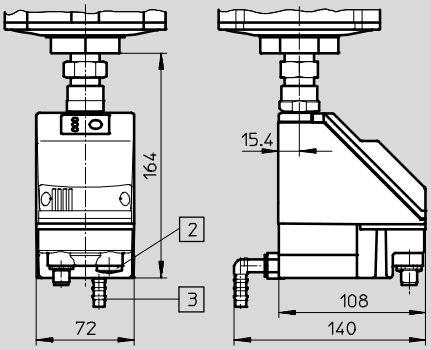

Condensate drain PWEA:

2 Electrical connection: Screw terminal PG9

3 Connection 360° rotatable for plastic tubing PUN-H-12x2

Ordering data

Metal bowl

Size	Condensate drain	Connection	Micro filter Grade of filtration 0.01 µm			Fine filter Grade of filtration 1 µm	
			Part No.	Type		Part No.	Type
MS12	fully automatic	G1 ... G2[1]	**537154**	**MS12-LFM-G-AUV**		**537153**	**MS12-LFM-G-BUV**

1) Connecting plate must be ordered separately as an accessory ➔ Internet: ms12-ag

Note: This product conforms to ISO 1179-1 and to ISO 228-1

Fine and micro filters MS12-LFM, MS series

Ordering data – Modular products

FESTO

M Mandatory data								O Options		
Module No.	Series	Size	Function	Connection size	Grade of filtration	Bowl	Condensate drain	Filter change sensor	Type of mounting	Alternative flow direction
535042	MS	12	LFM	AGF, AGG, AGH, AGI, G	B, A	U	M, V, E2, E3, E4	DA	WP	Z
Order example										
535042	**MS**	**12**	– **LFM**	– **AGI**	– **A**	– **U**	– **M**	–	–	–

Ordering table

Grid dimension	[mm]	124	Conditions	Code	Enter code
M	Module No.	**535042**			
	Series	Standard		**MS**	MS
	Size	12		**12**	12
	Function	Fine and micro filter		**-LFM**	-LFM
	Connection size	Connecting plate G1		**-AGF**	
		Connecting plate G1¼		**-AGG**	
		Connecting plate G1½		**-AGH**	
		Connecting plate G2		**-AGI**	
		Module without connecting thread, without connecting plate		**-G**	
	Grade of filtration	1 µm		**-B**	
		0.01 µm		**-A**	
	Bowl	Metal bowl		**-U**	-U
	Condensate drain	Manual		**-M**	
		Fully automatic (P1 max. 12 bar)		**-V**	
		External fully automatic condensate drain, electrical, 110 V AC, terminals		**-E2**	
		External fully automatic condensate drain, electrical, 230 V AC, terminals		**-E3**	
		External fully automatic condensate drain, electrical, 24 V DC, terminals		**-E4**	
O	Filter change sensor	Differential pressure indicator, optical		**-DA**	
	Type of mounting	Mounting bracket	1	**-WP**	
	Alternative flow direction	Flow direction from right to left		**-Z**	

1 **WP** Only with connecting plate AGF, AGG, AGH or AGI.

Transfer order code

535042	MS	12	– LFM	–	–	– U	–	–	–	

Active carbon filters MS12-LFX, MS series

Peripherals overview

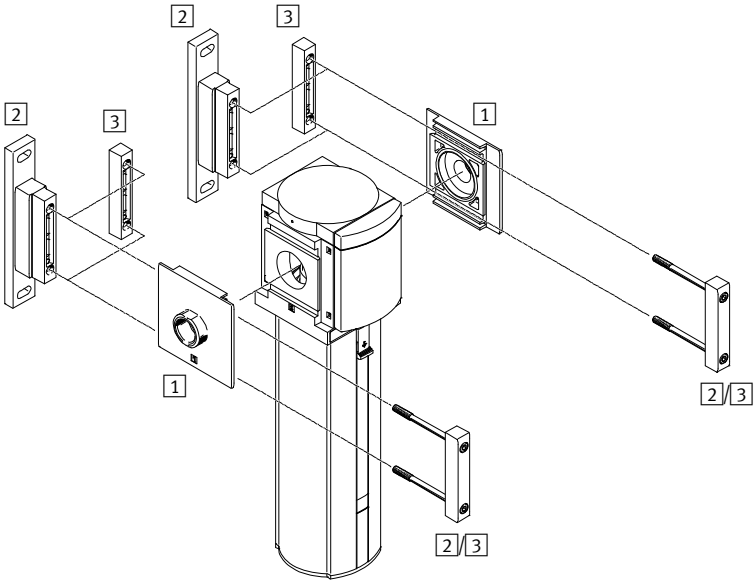

Note

Additional accessories:

– Module connector for combination with size MS9 ➔ Internet: armv

Mounting attachments and accessories		
		➔ Page/Internet
1	Connecting plate-SET MS12-AG...	ms12-ag
2	Mounting bracket MS12-WP	ms12-wp
3	Module connector MS12-MV	ms12-mv

Active carbon filters MS12-LFX, MS series

Type codes

MS	12	–	LFX	–	G	–	U

Series	
MS	Standard service unit

Size	
12	Grid dimension 124 mm

Service function	
LFX	Active carbon filter

Connection size	
G	Module without connecting thread, without connecting plate Connecting plates ➔ Accessories

Bowl guard	
U	Integrated as metal bowl

Further variants can be ordered using the modular system ➔ 86

- Connecting plates
- Type of mounting
- Alternative flow direction

Active carbon filters MS12-LFX, MS series

Technical data

Function

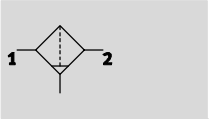

Flow rate
5,065 … 15,190 l/min

Temperature range
−10 … +60 °C

Operating pressure
0 … 20 bar

- Removal of liquid and gaseous oil particles from compressed air using active carbon
- Eliminates odours and vapours
- Prefiltration with micro filter MS12-LFM-A, grade of filtration 0.01 µm, recommended
- New filter cartridges ➔ 89

General technical data				
Pneumatic connection 1, 2[1]	G1	G1¼	G1½	G2
Design	Active carbon filter			
Type of mounting	Via accessories			
	In-line installation			
Assembly position	Vertical ±5°			
Air purity class at the output[2]	Compressed air in accordance with ISO 8573-1:2010 [1:4:1]			
Bowl guard	Integrated as metal bowl			
Residual oil content [mg/m³]	≤ 0.003			

1) Dependent on connecting plate selected, must be ordered separately as an accessory ➔ Internet: ms12-ag
2) We recommend that the filter cartridge be replaced by a new one after 1,000 operating hours. (Applies to an ambient temperature of 21 °C. At higher temperatures the service life of the filter cartridge will be reduced.)
Note: This product conforms to ISO 1179-1 and to ISO 228-1

Standard flow rate q_n [l/min]				
Operating pressure	4 bar	6 bar	10 bar	14 bar
Max. standard flow rate for air purity class $q_{n\ max}$	5,065	7,090	11,150	15,190

Operating and environmental conditions		
Operating pressure	[bar]	0 … 20
Operating medium		Compressed air in accordance with ISO 8573-1:2010 [1:4:2]
		Inert gases
Ambient temperature	[°C]	−10 … +60
Temperature of medium	[°C]	+5 … +30
Storage temperature	[°C]	−10 … +60
Corrosion resistance	CRC[1]	2

1) Corrosion resistance class CRC 2 to Festo standard FN 940070
Moderate corrosion stress. Indoor applications in which condensation may occur. External visible parts with primarily decorative requirements for the surface and which are in direct contact with the ambient atmosphere typical for industrial applications.

Weights [g]	
Active carbon filter with metal bowl U	7,000

Active carbon filters MS12-LFX, MS series

Technical data

Materials

Sectional view

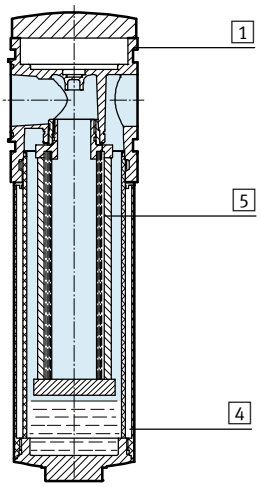

Active carbon filter		
1	Body	Die-cast aluminium
4	Metal bowl	Wrought aluminium alloy
	Viewing window	PC
5	Filter	Active carbon
–	Seals	NBR
Note on materials		RoHS-compliant
		Free of copper and PTFE

Standard flow rate qn as a function of the differential pressure p1-2

With connecting plate MS12-AGF, Pneumatic connection G1

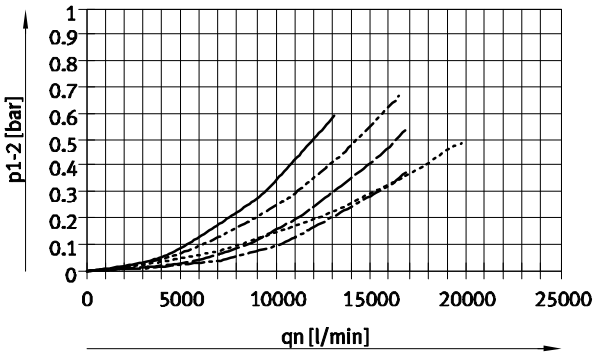

With connecting plate MS12-AGG, Pneumatic connection G1¼

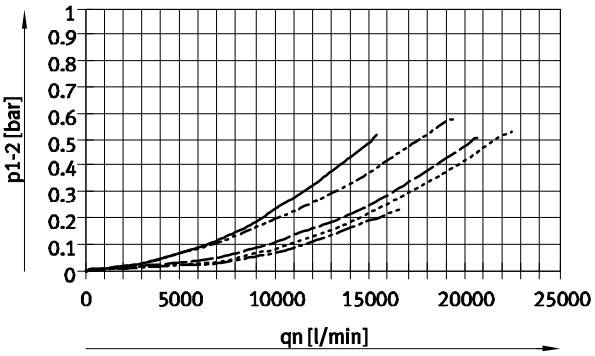

With connecting plate MS12-AGH, Pneumatic connection G1½

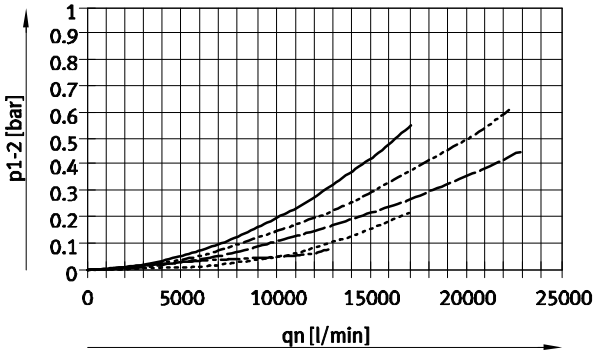

With connecting plate MS12-AGI, Pneumatic connection G2

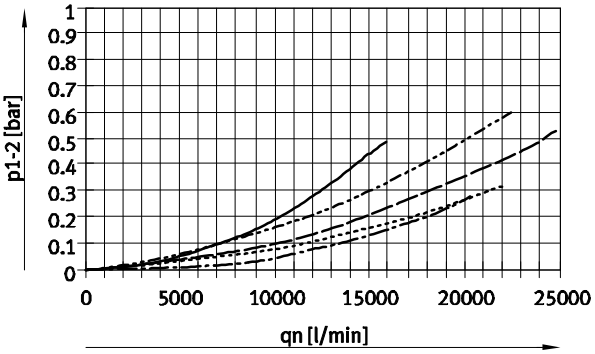

- p1: 4 bar
- p1: 6 bar
- p1: 8 bar
- p1: 10 bar
- p1: 12 bar

Dimensions – Basic version Download CAD data ➔ **www.festo.com**

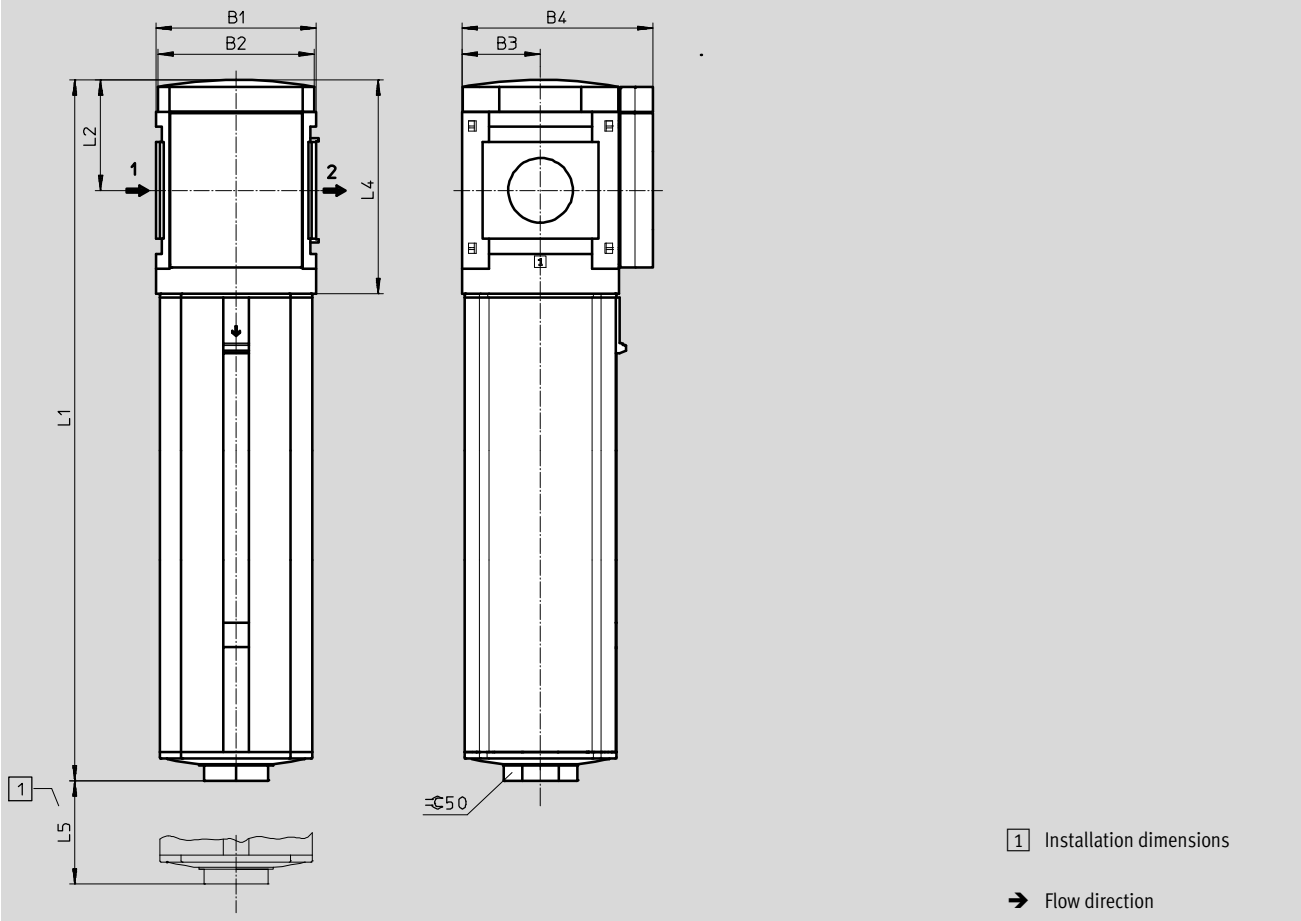

Type	B1	B2	B3	B4	L1	L2	L4	L5
MS12-LFX	124	122	61	148	543	86	166	350

Ordering data			
Metal bowl			
Size	Connection	Part No.	Type
MS12	G1 … G2[1)]	**537155**	**MS12-LFX-G-U**

1) Connecting plate must be ordered separately as an accessory ➔ Internet: ms12-ag

Note: This product conforms to ISO 1179-1 and to ISO 228-1

Active carbon filters MS12-LFX, MS series

Ordering data – Modular products

M Mandatory data												O Options		
Module No.	Series	Size		Function		Connection size		Bowl		Type of mounting		Alternative flow direction
535043	MS	12		LFX		AGF AGG AGH AGI G		U		WP		Z
Order example												
535043	**MS**	**12**	–	**LFX**	–	**AGF**	–	**U**	–	**WP**	–	**Z**

Ordering table

Grid dimension [mm]		124	Condi-tions	Code		Enter code
M	Module No.	**535043**				
	Series	Standard		**MS**		MS
	Size	12		**12**		12
	Function	Active carbon filter		**-LFX**		-LFX
	Connection size	Connecting plate G1		**-AGF**		
		Connecting plate G1¼		**-AGG**		
		Connecting plate G1½		**-AGH**		
		Connecting plate G2		**-AGI**		
		Module without connecting thread, without connecting plate		**-G**		
	Bowl	Metal bowl		**-U**		-U
O	Type of mounting	Mounting bracket	1	**-WP**		
	Alternative flow direction	Flow direction from right to left		**-Z**		

1 **WP** Only with connecting plate AGF, AGG, AGH or AGI.

Transfer order code

535043	**MS**	**12**	–	**LFX**	–		–	**U**	–		–			

Filters MS-LF/LFM/LFX, MS series

Accessories

Filter cartridges, MS4/MS6 series

MS...-LFM

MS...-LFP

MS...-LFX

Ordering data				
Size	Filter cartridge	Grade of filtration [µm]	Part No.	Type
MS4	Micro-filter cartridge	0.01	**162674**	**MS4/D-MINI-LFM-A**
	Fine-filter cartridge	1	**162677**	**MS4/D-MINI-LFM-B**
	Filter cartridge (colour: blue)	5	**534501**	**MS4-LFP-C**
	Filter cartridge (colour: white)	40	**534502**	**MS4-LFP-E**
	Activated carbon filter cartridge	–	**532912**	**MS4/D-MINI-LFX**
MS6	Micro-filter cartridge	0.01	**532909**	**MS6-LFM-A**
	Fine-filter cartridge	1	**532910**	**MS6-LFM-B**
	Filter cartridge (colour: blue)	5	**534499**	**MS6-LFP-C**
	Filter cartridge (colour: white)	40	**534500**	**MS6-LFP-E**
	Activated carbon filter cartridge	–	**532911**	**MS6-LFX**
High flow rate HF				
MS6	Micro-filter cartridge	0.01	**552093**	**MS6-LFM-A-HF**
	Fine-filter cartridge	1	**552092**	**MS6-LFM-B-HF**
	Activated carbon filter cartridge	–	**552094**	**MS6-LFX-HF**
Range of application HP, suitable for sealing air and cleaning air				
MS6	Micro-filter cartridge	0,01	**547922**	**MS6-LFM-AI**
	Fine-filter cartridge	1	**547923**	**MS6-LFM-BI**
	Activated carbon filter cartridge	–	**547925**	**MS6-LFX-AKI**

Filter cartridges, MS9 series

MS9-LFM

MS9-LFX

Ordering data				
Size	Filter cartridge	Grade of filtration [µm]	Part No.	Type
MS9	Micro-filter cartridge	0.01	**553036**	**MS9-LFM-A**
	Fine-filter cartridge	1	**553037**	**MS9-LFM-B**
	Filter cartridge	5	**570309**	**MS9-LFP-C**
	Filter cartridge	40	**570310**	**MS9-LFP-E**
	Activated carbon filter cartridge	–	**552946**	**MS9-LFX**
High flow rate HF				
MS9	Micro-filter cartridge	0.01	**552944**	**MS9-LFM-A-HF**
	Fine-filter cartridge	1	**552945**	**MS9-LFM-B-HF**

Filter cartridges, MS12 series

MS12-LFM-B

MS12-LFM-A

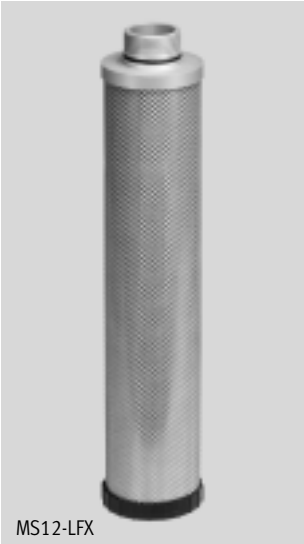
MS12-LFX

Ordering data				
Size	Filter cartridge	Grade of filtration [µm]	Part No.	Type
MS12	Micro-filter cartridge	0.01	**537146**	**MS12-LFM-A**
	Fine-filter cartridge	1	**537145**	**MS12-LFM-B**
	Filter cartridge	5	**537143**	**MS12-LFP-C**
	Filter cartridge	40	**537144**	**MS12-LFP-E**
	Activated carbon filter cartridge	–	**537147**	**MS12-LFX**